Manual No. 139
61-00-39
Revision 22
March 2024

Propeller Owner's Manual
and Logbook

Series: **HC-B3( )( )-2( )**
HC-B3( )( )-3( )
HC-B3( )( )-5( )
HC-B3TF-7( )
HC-B4( )( )-3( )
HC-B4( )( )-5( )
HC-B5M( )-2( )
HC-B5M( )-3( )
HC-B5M( )-5( )
HC-A3(V,MV)F-7( )

Steel Hub Turbine Propellers with Aluminum Blades

Hartzell Propeller LLC
One Propeller Place
Piqua, OH 45356-2634 U.S.A.
Ph: 937-778-4200 (Hartzell Propeller LLC)
Ph: 937-778-4379 (Product Support)
Product Support Fax: 937-778-4215

Fellow aviation enthusiasts, I urge you to read this Manual thoroughly. It contains a wealth of information about your new propeller.

The propeller is among the most reliable components of your airplane. It is also among the most critical to flight safety. It therefore deserves the care and maintenance called for in this Manual. Please give it your attention, especially the section dealing with Inspections and Checks.

Thank you for choosing a Hartzell propeller. Properly maintained it will give you many years of reliable service.

JJ Frigge
President, Hartzell Propeller LLC

WARNING (Rev. 5)

People who fly should recognize that various types of risks are involved; and they should take all precautions to minimize them, since they cannot be eliminated entirely. The propeller is a vital component of the aircraft. A mechanical failure of the propeller could cause a forced landing or create vibrations sufficiently severe to damage the aircraft, possibly causing it to become uncontrollable.

Propellers are subject to constant vibration stresses from the engine and airstream, which are added to high bending and centrifugal stresses.

Before a propeller is certified as being safe to operate on an airplane, an adequate margin of safety must be demonstrated. Even though every precaution is taken in the design and manufacture of a propeller, history has revealed rare instances of failures, particularly of the fatigue type.

It is essential that the propeller is properly maintained according to the recommended service procedures and a close watch is exercised to detect impending problems before they become serious. Any grease or oil leakage, loss of air pressure, unusual vibration, or unusual operation should be investigated and repaired, as it could be a warning that something serious is wrong.

For operators of uncertified or experimental aircraft an even greater level of vigilance is required in the maintenance and inspection of the propeller. Experimental installations often use propeller-engine combinations that have not been tested and approved. In these cases, the stress on the propeller and, therefore, its safety margin is unknown. Failure could be as severe as loss of a propeller or propeller blades and cause loss of propeller control and/or loss of aircraft control.

Hartzell Propeller LLC follows FAA regulations for propeller certification on certificated aircraft. Experimental aircraft may operate with unapproved engines or propellers or engine modifications to increase horsepower, such as unapproved crankshaft damper configurations or high compression pistons. These issues affect the vibration output of the engine and the stress levels on the propeller. Significant propeller life reduction and failure are real possibilities.

Frequent inspections are strongly recommended if operating with a non-certificated installation; however, these inspections may not guarantee propeller reliability, as a failing device may be hidden from the view of the inspector. Propeller overhaul is strongly recommended to accomplish periodic internal inspection.

Inspect the propeller/blades in accordance with the applicable operation/maintenance documents.

(Blank Page)

REVISION 22 HIGHLIGHTS

Revision 22, dated March 2024, incorporates the following:

Front matter (Cover, Revision Highlights, etc.), has been revised to match this revision.

Minor language/format changes and renumbering, if applicable are marked with a revision bar, but are not listed below.

Removed references to "Hartzell propeller Inc.". Revised to "Hartzell Propeller LLC" where applicable.

- INSTALLATION AND REMOVAL
  - Revised Figure 3-10, "Torque Wrench Adapter Position for W-flange Propellers"
  - Revised the section, "Installing HC-B(3,4)( )W-3( ) Propeller on the Aircraft Engine"

(Blank Page)

REVISION 22 HIGHLIGHTS

1. Introduction
   A. General
      (1) This is a list of current revisions that have been issued against this manual. Please compare it to the RECORD OF REVISIONS page to make sure that all revisions have been added to the manual.
   B. Components
      (1) Revision No. indicates the revisions incorporated in this manual.
      (2) Issue Date is the date of the revision.
      (3) Comments indicates the level of the revision.
         (a) New Issue is a new manual distribution. The manual is distributed in its entirety. All the page revision dates are the same and no change bars are used.
         (b) Reissue is a revision to an existing manual that includes major content and/or major format changes. The manual is distributed in its entirety. All the page revision dates are the same and no change bars are used.
         (c) Major Revision is a revision to an existing manual that includes major content or minor content changes over a large portion of the manual. The manual is distributed in its entirety. All the page revision dates are the same, but change bars are used to indicate the changes incorporated in the latest revision of the manual.
         (d) Minor Revision is a revision to an existing manual that includes minor content changes to the manual. Only the revised pages of the manual are distributed. Each page retains the date and the change bars associated with the last revision to that page.

Revision No.	Issue Date	Comments
Revision 5	Oct/99	Reissue
Revision 6	Mar/01	Minor Revision
Revision 7	Oct/02	Minor Revision
Revision 8	Dec/06	Minor Revision
Revision 9	Aug/09	Minor Revision
Revision 10	Jun/11	Minor Revision
Revision 11	Jul/12	Minor Revision
Revision 12	Mar/13	Minor Revision
Revision 13	Jun/15	Minor Revision
Revision 14	Oct/16	Minor Revision
Revision 15	Jul/17	Minor Revision
Revision 16	Oct/17	Minor Revision
Revision 17	Apr/20	Major Revision
Revision 18	Mar/21	Minor Revision
Revision 19	Sep/21	Minor Revision
Revision 20	Aug/23	Major Revision
Revision 21	Dec/23	Minor Revision
Revision 22	Mar/24	Minor Revision

RECORD OF REVISIONS

This is a record of revisions inserted into this manual.
Revision 20 includes all prior revisions.

Revision Number	Issue Date	Date Inserted	Inserted By
20	Aug/23	Aug/23	HPI
21	Dec/23	Dec/23	HPI
22	Mar/24	Mar/24	HP

(Blank Page)

RECORD OF TEMPORARY REVISIONS

TR No.	Issue Date	Date Inserted	Inserted By	Date Removed	Removed By

(Blank Page)

SERVICE DOCUMENTS LIST

CAUTION 1: DO NOT USE OBSOLETE OR OUTDATED INFORMATION. PERFORM ALL INSPECTIONS OR WORK IN ACCORDANCE WITH THE MOST RECENT REVISION OF A SERVICE DOCUMENT. INFORMATION CONTAINED IN A SERVICE DOCUMENT MAY BE SIGNIFICANTLY CHANGED FROM EARLIER REVISIONS. FAILURE TO COMPLY WITH INFORMATION CONTAINED IN A SERVICE DOCUMENT OR THE USE OF OBSOLETE INFORMATION MAY CREATE AN UNSAFE CONDITION THAT MAY RESULT IN DEATH, SERIOUS BODILY INJURY, AND/OR SUBSTANTIAL PROPERTY DAMAGE.

CAUTION 2: THE INFORMATION FOR THE DOCUMENTS LISTED INDICATES THE REVISION LEVEL AND DATE AT THE TIME THAT THE DOCUMENT WAS INITIALLY INCORPORATED INTO THIS MANUAL. INFORMATION CONTAINED IN A SERVICE DOCUMENT MAY BE SIGNIFICANTLY CHANGED FROM EARLIER REVISIONS. REFER TO THE APPLICABLE SERVICE DOCUMENT INDEX FOR THE MOST RECENT REVISION LEVEL OF THE SERVICE DOCUMENT.

Service Document Number	Incorporation Rev/Date
Service Alerts:	
SA 57	Oct/02
Service Bulletins:	
HC-SB-61-143B	Oct/02
HC-SB-61-181A, Rev. 4	Rev. 11 Jul/12
HC-SB-61-275	Aug/09

SERVICE DOCUMENTS LIST

Service Document Number	Incorporation Rev/Date
Service Letters:	
HC-SL-61-217	Oct/99
HC-SL-61-248	Rev. 11, Jul/12
HC-SL-61-254	Aug/09
HC-SL-61-324	Rev. 11, Jul/12
HC-SL-61-185, Rev. 3	Oct/16
HC-SL-61-364	Rev. 18 Mar/21

AIRWORTHINESS LIMITATIONS

The Airworthiness Limitations section is FAA approved and specifies maintenance required under 14 CFR §§ 43.16 and 91.403 of the Federal Aviation Regulations unless an alternative program has been FAA approved.

FAA APPROVED
by: ANTHONY T FLORES Digitally signed by ANTHONY T FLORES Date: 2021.08.18 16:02:29 -05'00' date: 18-Aug-2021

for Manager, Chicago ACO Branch
Compliance & Airworthiness Division, AIR-7CO
Federal Aviation Administration

Rev. No.	Description of Revision
9	Adds airworthiness limitation information from Hartzell Overhaul Manuals 118F (61-10-18) and 132A (61-10-32)
10	For blade life limit, revised the blade model designation to include (N) version for HC-B3TN-3(B,H) and HC-B4TN-5 (C,F) propellers
14	Added blade and hub life limits for propeller model HC-B5MA-2A/M9128NSA(K)
17	For blade life limit, revised the blade model designation to include (N) version for HC-B3TN-3(C,D) and HC-B3TN-3(B,C) propellers
19	Added life limits for pitch change rod part number B-4026-1

AIRWORTHINESS LIMITATIONS

1. The Airworthiness Limitations in this chapter have been relocated from Hartzell Overhaul Manuals 118F (61-10-18) and 132A (61-10-32) to this manual.

2. Replacement Time (Life Limits)

   A. The FAA establishes specific life limits for certain component parts, as well as the entire propeller. Such limits require replacement of the identified parts after a specified number of hours of use.

   B. The following data summarize all current information about Hartzell life limited parts as related to propeller models affected by this manual. These parts are not life limited on other installations; however, time accumulated toward life limit accrues when first operated on aircraft/engine/propeller combinations listed and continues regardless of subsequent installations (which may or may not be life limited).

      (1) Blade models that incorporate ice protection components do not affect the blade life limit. Example: The (B,K) letter designation in blade model T10178(B,K) indicates that ice protection components may be installed. If ice protection components are installed, the blade life limit still applies.

   C. The following list specifies life limits for **blades only** that are on FAA Type Certified Aircraft. Blades listed are life limited only on the specified applications.

FAA APPROVED

by: _____ date: 13 Oct 2016

for Manager, Chicago Aircraft Certification Office,
ACE-115C
Federal Aviation Administration

(1) FAA Type Certified Aircraft - Blade Life Limits

Aircraft/Engine/Propeller	Blade Life Limit
Aircraft: Beech T34C,T34C-1 Engine: Pratt & Whitney - PT6A-25, -25A Propeller: HC-B3TN-3(B,H)/T10173(N)-11R	9,634 hours
Aircraft: CASA 212 Engine: Allied Signal - TPE331-5-251C Propeller: HC-B4TN-5(C,F)L/LT10282(N)+4	31,000 hours
Aircraft: Fairchild Swearingen SA226TC Metro IIA Engine: Allied Signal - TPE331-10UA, -501G or 511G Propeller: HC-B3TN-5(C,E,M)/T10282(H)(N)	9,000 hours*
Aircraft: Mitsubishi MU-2's Engine: Allied Signal - TPE-331-(5,10)-( ) Propeller: HC-B4TN-5( )L/LT10282N(S)-5.3R	10, 000 hours
Aircraft: Pilatus PC-7 Engine: Pratt and Whitney - PT6A-25,-25A Propeller: HC-B3TN-2( )/T10173C(N)-8	4,240 hours** to 9,795 hours
Aircraft: Pilatus PC-7 modified by Sierra Industries Engine: Pratt and Whitney - PT6A-25C Propeller: HC-B3TN-2/T10178(N)-8R	3,000 hours

FAA APPROVED

by: Mark Grace date: 13 Oct 2016

for Manager, Chicago Aircraft Certification Office,
ACE-115C
Federal Aviation Administration

* Fairchild Swearingen Metro IIA, Serial Numbers TC398 and subsequent, model T10282()() propeller blades are life limited when operated above 12,500 pounds gross weight and must be retired after 9,000 hours of operation. The life limit begins once the blades are operated above 12,500 pounds gross weight and continues regardless of subsequent operating weight.

For those blades on which the total accumulated time in operation on an aircraft with a gross weight exceeding 12,500 pounds cannot be confirmed, the following formula will be used to establish an assumed time:

Months from date of STC incorporation X 180 = total assumed time on subject blades.

** Pilatus PC-7 propeller blades must be retired from service in accordance with the following schedule:

(a) Aircraft on which Power-On-Spin, Inertia Coupled Entry, and Snap Roll flight maneuvers are prohibited must be retired from service when 9795 flight hours have been acquired.

(b) Aircraft on which Power-On-Spin and Inertia Coupled Entry flight maneuvers are prohibited must be retired from service when 4240 flight hours have been acquired.

(c) Any aircraft, once operated with Snap Roll maneuvers permitted, must be retired from service upon acquiring 4240 flight hours.

FAA APPROVED

by: _____ date: Feb 13, 2016

for Manager, Chicago Aircraft Certification Office,
ACE-115C
Federal Aviation Administration

D. The following list specifies life limits for **blades only** that are on an aircraft *without* FAA Type Certificate. Blades listed are life limited only on the specified applications.

(1) Aircraft *Without* FAA Type Certificate - Blade Life Limits

Aircraft/Engine/Propeller	Blade Life Limit
Aircraft: Embraer EMB-312 Engine: Pratt & Whitney - PT6A-25C Propeller: HC-B3TN-3(C,D)/T10178(N)(B,K)-8R	12,000 hours
Aircraft: NDN-1T Firecracker Engine: Pratt & Whitney - PT6A-25A Propeller: HC-B3TN-3(B,C)/T10173(N)(B,K)-17	45,000 hours
Aircraft: North American Rockwell OV-10A Engine: Garrett T76-G-418M, -419M Propeller: HC-B4MN-5B(L)/(L)M9990N	20,900 hours
Aircraft: North American Rockwell OV-10D Engine: Garrett T76-G-420, -421 Propeller: HC-B4MN-5B(L)/(L)M9990N	20,900 hours
Aircraft: Antonov AN-38-100 (MTOW 9500 kg) Engine: Garrett - TPE-331-14GR Propeller: HC-B5MA-5A/M11276NK-3	22,000 hours
Aircraft: Antonov AN-38-100 (MTOW 9900 kg) Engine: Garrett TPE-331-14GR Propeller: HC-B5MA-5A/M11276NCK-3	11,300 hours
Aircraft: Embraer EMB-314 PT6A-68C Engine: Pratt & Whitney Propeller: HC-B5MA-2/M9128NS(K)	9,960 hours
Aircraft: TAI Hürkuş-(A,B) Engine: Pratt & Whitney-PT6A-68T rated at 1600 HP at 2000 RPM Propeller: HC-B5MA-2A/M9128NSA(K)	9,449 hours

FAA APPROVED

by: _____ date: 1/30/2020

Manager, Chicago ACO Branch
Compliance & Airworthiness Division, AIR-7CO
Federal Aviation Administration

E. The following list specifies life limits for **hubs only**. Hub units listed are life limited only on the specified applications.

(1) FAA Type Certified Aircraft - **Hub** Life Limits

NONE

(2) Aircraft *Without* FAA Type Certificate - **Hub** Life Limits

Aircraft/Engine/Propeller	Hub Life Limit
Aircraft: Embraer EMB-314 Engine: Pratt & Whitney - PT6A-68C Propeller: HC-B5MA-2/M9128NS(K)	19,589 hours
Aircraft: TAI Hürkuş-(A,B) Engine: Pratt & Whitney-PT6A-68T rated at 1600 HP at 2000 RPM Propeller: HC-B5MA-2A/M9128NSA(K)	19,589 hours

F. The following list specifies life limits for **clamps only**. Clamp assemblies listed are life limited only on the specified applications.

(1) Propeller Models on FAA Type Certified Aircraft

NONE

(2) Propeller Models on Aircraft *without* FAA Type Certificate

Aircraft/Engine/Propeller	Clamp Life Limit
Aircraft: Embraer EMB-314 Engine: Pratt & Whitney - PT6A-68C Propeller: HC-B5MA-2/M9128NS(K)	19,589 hours
Aircraft: TAI Hürkuş-(A,B) Engine: Pratt & Whitney-PT6A-68T rated at 1600 HP at 2000 RPM Propeller: HC-B5MA-2A/M9128NSA(K)	19,589 hours

FAA APPROVED

by: _____ date: 13 Oct 2011

for Manager, Chicago Aircraft Certification Office,
ACE-115C
Federal Aviation Administration

G. The following list specifies life limits for **pitch change rod part number C-1169-1 only**. Pitch change rods listed are life limited only on the specified applications.

(1) Propeller Models on FAA Type Certified Aircraft

Aircraft/Engine/Propeller	Pitch Change Rod Life Limit
Aircraft: Air Tractor AT-802(A) Engine: Honeywell - TPE331-14GR( ) Propeller: HC-B5MA-5H/M11693NS	6,026 hours

(2) Propeller Models on Aircraft *without* FAA Type Certificate

Aircraft/Engine/Propeller	Pitch Change Rod Life Limit
Aircraft: Marsh/Grumman S2 Engine: Honeywell - TPE331-14( ) Propeller: HC-B5MP-5/M11276(N)S(K)	6,026 hours
Aircraft: Marsh/Grumman S2F3 Engine: Honeywell - TPE331-14( ) Propeller: HC-B5MA-5H/M11692NS(K)	6,026 hours

FAA APPROVED

by: _____ date: 13 Oct 2016

for Manager, Chicago Aircraft Certification Office,
ACE-115C
Federal Aviation Administration

H. The following list specifies life limits for **pitch change rod part number C-1169-2 only**. Pitch change rods listed are life limited only on the specified applications.

(1) Propeller Models on FAA Type Certified Aircraft

NONE

(2) Propeller Models on Aircraft *without* FAA Type Certificate

Aircraft/Engine/Propeller	Pitch Change Rod Life Limit
Aircraft: Antonov AN-38-100 Engine: Honeywell - TPE331-14( ) Propeller: HC-B5MA-5A/M11276N(C)K-3	12,053 hours

2. Periodic Inspections

A. The HC-B3TN-3UL/LT10173N-21R propeller installed on Advanced Aerodynamics & Structures model 450 "Jetcruzer" is required to have repetitive blade inspection for erosion and/or corrosion at intervals not to exceed 24 months or 600 hours of operation, whichever occurs first. Inspection methods and procedures are described in Hartzell Service Bulletin HC-SB-61-181A.

FAA APPROVED

by: _____ date: 13 Oct 2016

Manager, Chicago Aircraft Certification Office,
ACE-115C
Federal Aviation Administration

I. The following list specifies life limits for **pitch change rod part number B-4026-1 only**. Pitch change rods listed are life limited only on the specified applications.

(1) Propeller Models on Aircraft *without* FAA Type Certificate

Aircraft/Engine/Propeller	Pitch Change Rod Life Limit
Aircraft: Antonov AN-2 Engine: Pratt and Whitney - PT6A-67B Propeller: HC-B5MA-3DA/M11691NS	42,423 hours

FAA APPROVED
by: ANTHONY T FLORES Digitally signed by ANTHONY T FLORES Date: 2021.08.18 16:02:29 -05'00' date: 18-Aug-2021

for Manager, Chicago ACO Branch
Compliance & Airworthiness Division, AIR-7CO
Federal Aviation Administration

(Blank Page)

LIST OF EFFECTIVE PAGES

Chapter	Page	Revision	Date
Cover/Inside Cover	Cover and Inside Cover	Rev. 22	Mar/24
Message	1 thru 4	Rev. 22	Mar/24
Revision Highlights	1 thru 4	Rev. 22	Mar/24
Record of Revisions	1 thru 2	Rev. 20	Aug/23
Record of Temporary Revisions	1 thru 2	Rev. 20	Aug/23
Service Documents List	1 thru 2	Rev. 20	Aug/23
Airworthiness Limitations	1 thru 10	Rev. 20	Aug/23
List of Effective Pages	1 thru 4	Rev. 22	Mar/24
Table of Contents	1 thru 2	Rev. 20	Aug/23
Introduction	1-1 thru 1-5	Rev. 22	Mar/24
	1-6	Rev. 20	Aug/23
	1-7 thru 1-17	Rev. 22	Mar/24
	1-18	Rev. 21	Dec/23
	1-19	Rev. 22	Mar/24
	1-20 thru 1-32	Rev. 21	Dec/23
Description and Operation	2-1 thru 2-16	Rev. 20	Aug/23
	2-17	Rev. 22	Mar/24
	2-18 thru 2-21	Rev. 20	Aug/23
	2-22	Rev. 22	Mar/24
	2-23 thru 2-25	Rev. 20	Aug/23
	2-26	Rev. 22	Mar/24
	2-27 thru 2-28	Rev. 20	Aug/23
	2-29	Rev. 22	Mar/24
	2-30	Rev. 20	Aug/23
	2-31 thru 2-32	Rev. 22	Mar/24
	2-33 thru 2-34	Rev. 20	Aug/23
Installation and Removal	3-1 thru 3-2	Rev. 22	Mar/24
	3-2.1 thru 3-2.2	Rev. 20	Aug/23
	3-3	Rev. 21	Dec/23
	3-4 thru 3-5	Rev. 22	Mar/24

LIST OF EFFECTIVE PAGES

Chapter	Page	Revision	Date
Installation and Removal	3-6	Rev. 20	Aug/23
	3-7	Rev. 21	Dec/23
	3-8	Rev. 20	Aug/23
	3-9 thru 3-14	Rev. 21	Dec/23
	3-15	Rev. 22	Mar/24
	3-16	Rev. 21	Dec/23
	3-17	Rev. 22	Mar/24
	3-18 thru 3-20	Rev. 21	Dec/23
	3-21 thru 3-22	Rev. 22	Mar/24
	3-23 thru 3-27	Rev. 21	Dec/23
	3-28 thru 3-29	Rev. 22	Mar/24
	3-30	Rev. 21	Dec/23
	3-31	Rev. 22	Mar/24
	3-32	Rev. 20	Aug/23
	3-33 thru 3-35	Rev. 21	Dec/23
	3-36	Rev. 22	Mar/24
	3-37 thru 3-38	Rev. 21	Dec/23
	3-39	Rev. 22	Mar/24
	3-40 thru 3-43	Rev. 21	Dec/23
	3-44 thru 3-47	Rev. 20	Aug/23
	3-48	Rev. 21	Dec/23
	3-49 thru 3-50	Rev. 20	Aug/23
	3-51 thru 3-52	Rev. 22	Mar/24
	3-53 thru 3-54	Rev. 21	Dec/23
	3-55 thru 3-57	Rev. 22	Mar/24
	3-58	Rev. 21	Dec/23
	3-59	Rev. 22	Mar/24
	3-60	Rev. 21	Dec/23
	3-61	Rev. 22	Mar/24
	3-62	Rev. 21	Dec/23
	3-63	Rev. 22	Mar/24
	3-64 thru 3-68	Rev. 21	Dec/23

LIST OF EFFECTIVE PAGES

Chapter	Page	Revision	Date
Testing and Troubleshooting	4-1 thru 4-3	Rev. 22	Mar/24
	4-4 thru 4-10	Rev. 20	Aug/23
Inspection and Check	5-1	Rev. 21	Dec/23
	5-2 thru 5-6	Rev. 22	Mar/24
	5-7	Rev. 21	Dec/23
	5-8 thru 5-10	Rev. 20	Aug/23
	5-11 thru 5-13	Rev. 22	Mar/24
	5-14	Rev. 20	Aug/23
	5-15 thru 5-16	Rev. 22	Mar/24
	5-17	Rev. 20	Aug/23
	5-18	Rev. 22	Mar/24
	5-19	Rev. 20	Aug/23
	5-20 thru 5-23	Rev. 22	Mar/24
	5-24	Rev. 21	Dec/23
	5-25	Rev. 22	Mar/24
	5-26 thru 5-27	Rev. 20	Aug/23
	5-28 thru 5-29	Rev. 22	Mar/24
	5-30	Rev. 20	Aug/23
	5-31	Rev. 22	Mar/24
	5-32	Rev. 21	Dec/23
	5-33	Rev. 20	Aug/23
	5-34	Rev. 22	Mar/24
Maintenance Practices	6-1 thru 6-5	Rev. 20	Aug/23
	6-6	Rev. 22	Mar/24
	6-7	Rev. 20	Aug/23
	6-8 thru 6-9	Rev. 22	Mar/24
	6-10	Rev. 20	Aug/23
	6-11 thru 6-12	Rev. 22	Mar/24
	6-13 thru 6-17	Rev. 20	Aug/23
	6-18 thru 6-19	Rev. 22	Mar/24
	6-20	Rev. 21	Dec/23
	6-21	Rev. 22	Mar/24

LIST OF EFFECTIVE PAGES

Chapter	Page	Revision	Date
Maintenance Practices	6-22	Rev. 21	Dec/23
	6-23 thru 6-24	Rev. 22	Mar/24
	6-25 thru 6-29	Rev. 20	Aug/23
	6-30 thru 6-32	Rev. 22	Mar/24
Anti-ice and De-ice Systems	7-1 thru 7-5	Rev. 20	Aug/23
	7-6	Rev. 22	Mar/24
Records	8-1 thru 8-4	Rev. 20	Aug/23

TABLE OF CONTENTS

(Blank Page)

INTRODUCTION - CONTENTS

INTRODUCTION - CONTENTS, CONTINUED

LIST OF FIGURES

1. General (Rev. 2)

A. Statement of Purpose

(1) This manual has been reviewed and accepted by the FAA. Additionally, the Airworthiness Limitations section of this manual has been approved by the FAA.

CAUTION: KEEP THIS MANUAL WITH THE PROPELLER OR WITH THE AIRCRAFT ON WHICH IT IS INSTALLED, AT ALL TIMES. THE LOGBOOK RECORD WITHIN THIS MANUAL MUST BE MAINTAINED, RETAINED CONCURRENTLY, AND BECOME A PART OF THE AIRCRAFT AND ENGINE SERVICE RECORDS.

(2) The information in this manual can be used by qualified personnel to install, operate, and maintain the applicable Hartzell propeller assemblies.

(a) Additional manuals are available that include overhaul procedures and specifications for the propeller.

(3) This manual may include multiple design types.

(a) Parentheses shown in the propeller model designations in this or other Hartzell Propeller publications indicate letter(s) and/or number(s) that may or may not be present because of different configurations permitted on the various aircraft installations.

1 Refer to the Description and Operation chapter of this manual for propeller and blade model designation information.

(4) Where possible, this manual is written in the format specified by ATA iSpec 2200.

B. Maintenance Practices

(1) The propeller and its components are highly vulnerable to damage while they are removed from the engine. Properly protect all components until they are reinstalled on the engine.

(2) Never attempt to move the aircraft by pulling on the propeller.

(3) Avoid the use of blade paddles. If blade paddles must be used, use at least two paddles. Do not put the blade paddle in the area of the de-ice or anti-icing boot when applying torque to a blade assembly. Put the blade paddle in the thickest area of the blade, just outside of the de-ice or anti-icing boot. Use one blade paddle per blade.

(4) Use only the approved consumables, e.g., cleaning agents, lubricants, etc.

(5) Observe applicable torque values during maintenance.

(6) Before installing the propeller on the engine, the propeller must be statically balanced. New propellers are statically balanced at Hartzell Propeller. Overhauled propellers must be statically balanced by a certified propeller repair station with the appropriate rating before return to service.

(a) Dynamic balance is recommended, but may be accomplished at the discretion of the operator, unless specifically required by the airframe or engine manufacturer.

1 Perform dynamic balancing in accordance with the Maintenance Practices chapter of this manual.

2 Additional procedures may be found in the aircraft maintenance manual.

(7) As necessary, use a soft, non-graphite pencil or crayon to make identifying marks on components.

(8) As applicable, follow military standard NASM33540 for safety wire, safety cable, and cotter pin general practices. Use 0.032 inch (0.81 mm) diameter stainless steel safety wire unless otherwise indicated.

(9) The information in this manual revision supersedes data in all previously published revisions of this manual.

(10) The airframe manufacturer's manuals should be used in addition to the information in this manual due to possible special requirements for specific aircraft applications.

(11) If the propeller is equipped with an ice protection system that uses components supplied by Hartzell Propeller, applicable instructions and technical information for the components can be found in Hartzell Propeller Ice Protection System Manual 180 (30-61-80).

(12) Propeller ice protection system components not supplied by Hartzell Propeller are controlled by the applicable TC or STC holder's Instructions for Continued Airworthiness (ICA).

(13) Approved corrosion protection followed by approved paint must be applied to all aluminum blades.

(a) For information about the application of corrosion protection and paint, refer to the Maintenance Practices chapter of this manual. Operation of blades without the specified coatings and finishes, i.e., "polished blades", is not permitted.

2. Airframe or Engine Modifications (Rev. 2)

A. Propeller Stress Levels

(1) Propellers are approved vibration wise on airframe and engine combinations based on tests or analysis of similar installations. This data has demonstrated that propeller stress levels are affected by airframe configuration, airspeed, weight, power, engine configuration, and approved flight maneuvers. Aircraft modifications which can affect propeller stress include, but are not limited to: aerodynamic changes ahead of or behind the propeller, realignment of the thrust axis, increasing or decreasing airspeed limits, increasing or decreasing weight limits (less significant on piston engines), and the addition of approved flight maneuvers (utility and aerobatic).

B. Engine Modifications

(1) Engine modifications can affect the propeller. The two primary categories of engine modifications are those that affect structure and those which affect power. An example of a structural engine modification is the alteration of the crankshaft or damper of a piston engine. Any change to the weight, stiffness, or tuning of rotating components could result in a potentially dangerous resonant condition that is not detectable by the pilot. Most common engine modifications affect the power during some phase of operation. Some increase the maximum power output, while others improve the power available during hot and high operation (flat rating) or at off-peak conditions.

(a) Examples of turbine engine modifications include, but are not limited to: changes to the compressor, power turbine or hot section of a turboprop engine.

(b) Examples of reciprocating engine modifications include, but are not limited to: the addition or alteration of a turbocharger or turbonormalizer, increased compression ratio, increased RPM, altered ignition timing, electronic ignition, full authority digital electronic controls (FADEC), or tuned induction or exhaust.

(2) All such modifications must be reviewed and approved by the propeller manufacturer prior to obtaining approval on the aircraft.

3. Restrictions and Placards (Rev. 1)

A. Important Information

(1) The propellers covered by this manual may have a restricted operating range that requires a cockpit placard.

(a) The restrictions, if present, will vary depending on the propeller, blade, engine, and/or aircraft model.

(b) Review the propeller and aircraft type certificate data sheet (TCDS), Pilot Operating Handbook (POH), and any applicable Airworthiness Directives for specific information.

4. Reference Publications

A. Hartzell Propeller Publications

(1) Information published in Service Bulletins, Service Letters, Service Advisories, and Service Instructions may supersede information published in this manual. The reader must consult active Service Bulletins, Service Letters, Service Advisories, and Service Instructions for information that may have not yet been incorporated into the latest revision of this manual.

(2) In addition to this manual, one or more of the following publications are required for information regarding specific recommendations and procedures to maintain propeller assemblies that are included in this manual.

Manual No. (ATA No.)	Available at www.hartzellprop.com	Hartzell Propeller Manual Title
n/a	Yes	Active Hartzell Propeller Service Bulletins, Service Letters, Service Instructions, and Service Advisories
Manual 118F (61-10-18)	-	Three and Four-Blade Steel Hub Turbine Propeller Maintenance Manual
Manual 127 (61-16-27)	Yes	Metal Spinner Maintenance Manual
Manual 132A (61-10-32)	-	Five-Blade Steel Hub Turbine Engine Propeller Overhaul and Maintenance Manual
Manual 133C (61-13-33)	-	Aluminum Blade Overhaul Manual
Manual 148 (61-16-48)	Yes	Composite Spinner Maintenance Manual

Manual No. (ATA No.)	Available at www.hartzellprop.com	Hartzell Propeller Manual Title
Manual 159 (61-02-59)	Yes	Application Guide
Manual 165A (61-00-65)	Yes	Illustrated Tool and Equipment Manual
Manual 180 (30-61-80)	Yes	Ice Protection System Manual
Manual 202A (61-01-02)	Vol. 7, Yes Vol. 11, Yes	Standard Practices Manual, Volumes 1 through 11

B. Vendor Publications

None.

5. Personnel Requirements (Rev. 2)

A. Service and Maintenance Procedures in this Manual

(1) Personnel performing the service and maintenance procedures in this manual are expected to have the required equipment/tooling, training, and certifications (when required by the applicable Aviation Authority) to accomplish the work in a safe and airworthy manner.

(2) Compliance to the applicable regulatory requirements established by the Federal Aviation Administration (FAA) or international equivalent is mandatory for anyone performing or accepting responsibility for the inspection and/or repair of any Hartzell Propeller product.

(a) Maintenance records must be kept in accordance with the requirements established by the Federal Aviation Administration (FAA) or international equivalent.

(b) Refer to Federal Aviation Regulation (FAR) Part 43 for additional information about general aviation maintenance requirements.

6. Special Tooling and Consumable Materials (Rev. 2)
   A. Special Tooling
      (1) Special tooling may be required for procedures in this manual. For further tooling information, refer to Hartzell Propeller Illustrated Tool and Equipment Manual 165A (61-00-65).
         (a) Tooling reference numbers appear with the prefix "TE" directly following the tool name to which they apply. For example, a template that is reference number 133 will appear as: template TE133.
   B. Consumable Materials
      (1) Consumable materials are referenced in certain sections throughout this manual. Specific approved materials are listed in the Consumable Materials chapter of Hartzell Propeller Standard Practices Manual 202A (61-01-02).
         (a) Consumable material reference numbers appear with the prefix "CM" directly following the material to which they apply. For example, an approved adhesive that is reference number 16 will appear as: adhesive CM16. Only the material(s) specified can be used.
7. Safe Handling of Paints and Chemicals (Rev. 1)
   A. Instructions for Use
      (1) Always use caution when handling or being exposed to paints and/or chemicals during propeller overhaul and/or maintenance procedures.
      (2) Before using paint or chemicals, always read the manufacturer's label on the container(s) and follow specified instructions and procedures for storage, preparation, mixing, and/or application.
      (3) Refer to the product's Material Safety Data Sheet (MSDS) for detailed information about the physical properties, health, and physical hazards of any paint or chemical.

8. Calendar Limits and Long Term Storage (Rev. 3)

A. Calendar Limits

(1) The effects of exposure to the environment over a period of time create a need for propeller overhaul regardless of flight time.

(2) A calendar limit between overhauls is specified in Hartzell Propeller Service Letter HC-SL-61-61Y.

(3) Experience has shown that special care, such as keeping an aircraft in a hangar, is not sufficient to permit extension of the calendar limit.

(4) The start date for the calendar limit is when the propeller is first installed on an engine.

(5) The calendar limit is not interrupted by subsequent removal and/or storage.

(6) The start date for the calendar limit must not be confused with the warranty start date, that is with certain exceptions, the date of installation by the first retail customer.

B. Long Term Storage

(1) Propellers that have been in storage have additional inspection requirements before installation. Refer to the Packaging and Storage chapter of Hartzell Propeller Standard Practices Manual 202A (61-01-02).

9. Component Life and Overhaul (Rev. 3)

WARNING: CERTAIN PROPELLER COMPONENTS USED IN NON-AVIATION APPLICATIONS ARE MARKED WITH DIFFERENT PART NUMBERS TO DISTINGUISH THEM FROM COMPONENTS USED IN AVIATION APPLICATIONS. DO NOT ALTER THE PART NUMBERS SHOWN ON PARTS DESIGNATED FOR NON-AVIATION APPLICATIONS OR OTHERWISE APPLY THOSE PARTS FOR USE ON AVIATION APPLICATIONS.

A. Component Life

(1) Component life is expressed in terms of hours of service (Time Since New, TSN) and in terms of hours of service since overhaul (Time Since Overhaul, TSO).

NOTE: TSN/TSO is considered as the time accumulated between rotation and landing, i.e., flight time.

(2) Time Since New (TSN) and Time Since Overhaul (TSO) records for the propeller hub and blades must be maintained in the propeller logbook.

(3) Both TSN and TSO are necessary for defining the life of the component. Certain components, or in some cases an entire propeller, may be "life limited", which means that they must be replaced after a specified period of use (TSN).

(a) It is a regulatory requirement that a record of the Time Since New (TSN) be maintained for all life limited parts.

(b) Refer to the Airworthiness Limitations chapter in the applicable Hartzell Propeller Owner's Manual for a list of life limited components.

(4) When a component or assembly undergoes an overhaul, the TSO is returned to zero hours.

(a) Time Since New (TSN) can never be returned to zero.

(b) Repair without overhaul does not affect TSO or TSN.

(5) Blades and hubs are sometimes replaced while in service or at overhaul.

(a) Maintaining separate TSN and TSO histories for a replacement hub or blade is required.

(b) Hub replacement

1 If the hub is replaced, the replacement hub serial number must be recorded (the entry signed and dated) in the propeller logbook.

2 The propeller will be identified with the serial number of the replacement hub.

NOTE: Propeller assembly serial numbers are impression stamped on the hub. For stamping information, refer to the Parts Identification and Marking chapter of Hartzell Propeller Standard Practices Manual 202A (61-01-02).

3 The TSN and TSO of the replacement hub must be recorded and maintained in the propeller logbook.

4 If tracking any component(s) other than the hub/blades, maintain these TSN/TSO records separately in the propeller logbook.

NOTE: Hub replacement does not affect the TSN/TSO of any other propeller components.

B. Overhaul

(1) Overhaul is the periodic disassembly, cleaning, inspecting, repairing as necessary, reassembling, and testing in accordance with approved standards and technical data approved by Hartzell Propeller.

(2) The overhaul interval is based on hours of service, i.e., flight time, or on calendar time.

(a) Overhaul intervals are specified in Hartzell Propeller Service Letter HC-SL-61-61Y.

(b) At such specified periods, the propeller hub assembly and the blade assemblies must be completely disassembled and inspected for cracks, wear, corrosion, and other unusual or abnormal conditions.

(3) Overhaul must be completed in accordance with the latest revision of the applicable component maintenance manual and other publications applicable to, or referenced in, the component maintenance manual.

(a) Parts that are not replaced at overhaul must be inspected in accordance with the check criteria in the applicable Hartzell Propeller component maintenance manual.

(b) Parts that must be replaced at overhaul are identified by a "Y" in the O/H column of the Illustrated Parts List in the applicable Hartzell Propeller component maintenance manual.

(4) The information in this manual supersedes data in all previously published revisions of this manual.

10. Damage/Repair Types (Rev. 2)

A. Airworthy/Unairworthy Damage

(1) Airworthy damage is a specific condition to a propeller component that is within the airworthy damage limits specified in the applicable Hartzell Propeller component maintenance manual.

(a) Airworthy damage does not affect the safety or flight characteristics of the propeller and conforms to its type design.

(b) Airworthy damage does not require repair before further flight, but should be repaired as soon as possible to prevent degradation of the damage.

(2) Unairworthy damage is a specific condition to a propeller component that exceeds the airworthy damage limits specified in the applicable Hartzell Propeller component maintenance manual.

(a) Unairworthy damage can affect the safety or flight characteristics of the propeller and does not conform to its type design.

(b) Unairworthy damage must be repaired before the propeller is returned to service.

B. Minor/Major Repair

(1) Minor Repair

(a) Minor repair is that which may be done safely in the field by a certified aircraft mechanic.

1 For serviceable limits and repair criteria for Hartzell propeller components, refer to the applicable Hartzell Propeller component maintenance manual.

(2) Major Repair

(a) Major repair cannot be done by elementary operations.

(b) Major repair work must be accepted by an individual that is certified by the Federal Aviation Administration (FAA) or international equivalent.

1 Hartzell recommends that individuals performing major repairs also have a Factory Training Certificate from Hartzell Propeller.

2 The repair station must meet facility, tooling, and personnel requirements and is required to participate in Hartzell Propeller. Sample Programs as defined in the Approved Facilities chapter of Hartzell Propeller Standard Practices Manual 202A (61-01-02).

11. Propeller Critical Parts (Rev. 2)
    A. Propeller Critical Parts
        (1) Procedures in this manual may involve Propeller Critical Parts (PCP).
            (a) These procedures have been substantiated based on Engineering analysis that expects this product will be operated and maintained using the procedures and inspections provided in the Instructions for Continued Airworthiness (ICA) for this product.
            (b) Refer to the Illustrated Parts List chapter in the applicable Hartzell Propeller maintenance manual to identify the Propeller Critical Parts.
        (2) Numerous propeller system parts can produce a propeller Major or Hazardous effect, even though those parts may not be considered as Propeller Critical Parts.
            (a) The operating and maintenance procedures and inspections provided in the ICA for this product are, therefore, expected to be accomplished for all propeller system parts.
12. Warranty Service (Rev. 2)
    A. Warranty Claims
        (1) If you believe you have a warranty claim, contact the Hartzell Propeller Product Support Department to request a *Warranty Application* form. Complete this form and return it to Hartzell Propeller Product Support for evaluation **before proceeding with repair or inspection work**. Upon receipt of this form, the Product Support Department will provide instructions on how to proceed.
            (a) For Hartzell Propeller Product Support Department contact information, refer to the section, "Hartzell Propeller Contact Information" in this chapter.

13. Hartzell Propeller Contact Information (Rev. 3)

A. Product Support Department

(1) Contact the Hartzell Propeller Product Support Department about any maintenance problems or to request information not included in this publication.

NOTE: When calling from outside the United States, dial (001) before dialing the above telephone numbers.

(a) The Product Support Department may be reached during business hours (8:00 a.m. through 5:00 p.m., United States Eastern Time) at (937) 778-4379 or at (800) 942-7767, toll free from the United States and Canada.

(b) The Product Support Department can also be reached by fax at (937) 778-4215, and by email at techsupport@hartzellprop.com.

(c) After business hours, you may leave a message on our 24 hour product support line at (937) 778-4376 or at (800) 942-7767, toll free from the United States and Canada.

1 A technical representative will contact you during normal business hours.

2 Urgent AOG support is also available 24 hours per day, seven days per week via this message service.

(d) Additional information is available on the Hartzell Propeller website at www.hartzellprop.com.

B. Technical Publications Department

(1) For Hartzell Propeller service literature and revisions, contact:

Hartzell Propeller LLC
Attn: Technical
Publications Department
One Propeller Place
Piqua, Ohio 45356-2634 U.S.A.

Telephone: 937.778.4200
Fax: 937.778.4215
E-mail: manuals@hartzellprop.com

C. Recommended Facilities

(1) Hartzell Propeller LLC recommends using Hartzell approved distributors and repair facilities for the purchase, repair, and overhaul of Hartzell propeller assemblies or components.

(2) Information about the Hartzell Propeller LLC worldwide network of aftermarket distributors and approved repair facilities is available on the Hartzell website at www.hartzellprop.com.

14. "Video" Icon/QR Code

A. Instructions for Use

(1) The "Video" icon/QR code (refer to Figure 1) that appears in this manual allows you to access a video or animated demonstration of the applicable procedure.

CAUTION: THESE VIDEOS/ANIMATIONS ARE INTENDED TO SUPPLEMENT THE APPLICABLE INSTRUCTIONS. THEY SHOULD NOT BE USED WITHOUT FIRST READING AND UNDERSTANDING THE LATEST REVISION OF THE PROCEDURE AND ANY APPLICABLE WARNINGS/ CAUTIONS.

(2) To access the video/animated demonstration:

(a) If viewing the document file digitally:

1 Click on the QR code

(b) From a printed copy of the page:

1 Scan the QR code from any mobile device equipped with a QR reader application.

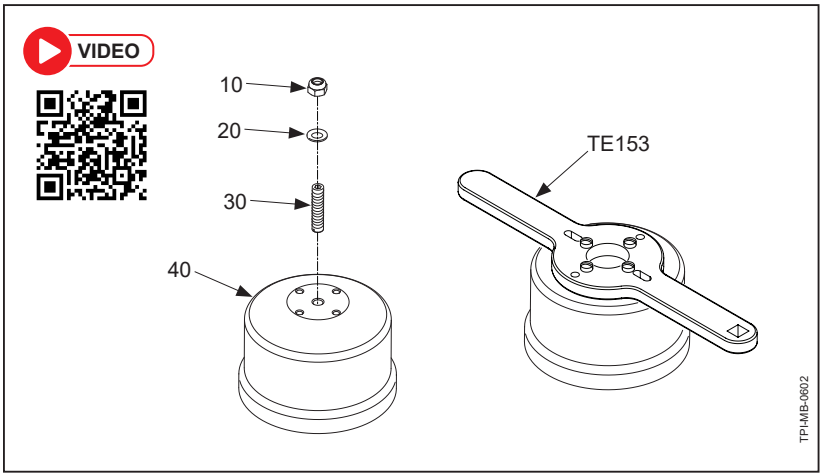

"Video" Icon/QR Code
Figure 1

15. Definitions (Rev. 5)

A basic understanding of the following terms will assist in maintaining and operating Hartzell propeller systems.

Term	Definition
Annealed	Softening of material due to overexposure to heat
Aviation Certified	Intended for FAA or international equivalent type certificated aircraft applications. A TC and PC number must be stamped on the hub, and a PC number must be stamped on blades.
Aviation Experimental	Intended for aircraft/propeller applications not certified by the FAA or international equivalent. Products marked with an "X" at or near the end of the model number or part number are not certified by the FAA or international equivalent and are not intended to use on certificated aircraft.
Beta Operation	A mode of pitch control that is directed by the pilot rather than by the propeller governor
Beta Range	Blade angles between low pitch and maximum reverse blade angle
Beta System	Parts and/or equipment related to operation (manual control) of propeller blade angle between low pitch blade angle and full reverse blade angle
Blade Angle	Measurement of blade airfoil location described as the angle between the blade airfoil and the surface described by propeller rotation

Term	Definition
Blade Centerline	An imaginary reference line through the length of a blade around which the blade rotates
Blade Station	Refers to a location on an individual blade for blade inspection purposes. It is a measurement from the blade "zero" station to a location on a blade, used to apply blade specification data in blade overhaul manuals. Note: Do not confuse *blade station* with *reference blade radius*; they may not originate at the same location.
Blemish	An imperfection with visible attributes, but having no impact on safety or utility
Brinelling	A depression caused by failure of the material in compression
Bulge	An outward curve or bend
Camber	The surface of the blade that is directed toward the front of the aircraft. It is the low pressure, or suction, side of the blade. The camber side is convex in shape over the entire length of the blade.
Chord	A straight line distance between the leading and trailing edges of an airfoil
Chordwise	A direction that is generally from the leading edge to the trailing edge of an airfoil
Co-bonded	The act of bonding a composite laminate and simultaneously curing it to some other prepared surface

Term	Definition
Composite Material	Kevlar®, carbon, or fiberglass fibers bound together with, or encapsulated within an epoxy resin
Compression Rolling	A process that provides improved strength and resistance to fatigue
Constant Force	A force that is always present in some degree when the propeller is operating
Constant Speed	A propeller system that employs a governing device to maintain a selected engine RPM
Corrosion (Aluminum)	The chemical or electrochemical attack by an acid or alkaline that reacts with the protective oxide layer and results in damage of the base aluminum. Part failure can occur from corrosion due to loss of structural aluminum converted to corrosion product, pitting, a rough etched surface finish, and other strength reduction damage caused by corrosion.
Corrosion (Steel)	Typically, an electrochemical process that requires the simultaneous presence of iron (component of steel), moisture and oxygen. The iron is the reducing agent (gives up electrons) while the oxygen is the oxidizing agent (gains electrons). Iron or an iron alloy such as steel is oxidized in the presence of moisture and oxygen to produce rust. Corrosion is accelerated in the presence of salty water or acid rain. Part failure can occur from corrosion due to loss of structural steel converted to corrosion product, pitting, a rough etched surface finish and other strength reduction damage caused by corrosion.

Term	Definition
Corrosion Product (Aluminum)	A white or dull gray powdery material that has an increased volume appearance (compared to non-corroded aluminum). Corrosion product is not to be confused with damage left in the base aluminum such as pits, worm holes, and etched surface finish.
Corrosion Product (Steel)	When iron or an iron alloy such as steel corrodes, a corrosion product known as rust is formed. Rust is an iron oxide which is reddish in appearance and occupies approximately six times the volume of the original material. Rust is flakey and crumbly and has no structural integrity. Rust is permeable to air and water, therefore the interior metallic iron (steel) beneath a rust layer continues to corrode. Corrosion product is not to be confused with damage left in the base steel such as pits and etched surface finish.
Crack	Irregularly shaped separation within a material, sometimes visible as a narrow opening at the surface
Debond	Separation of two materials that were originally bonded together in a separate operation
Defect	An imperfection that affects safety or utility
Delamination	Internal separation of the layers of composite material

Term	Definition
Dent	The permanent deflection of the cross section that is visible on both sides with no visible change in cross sectional thickness
Depression	Surface area where the material has been compressed but not removed
Distortion	Alteration of the original shape or size of a component
Edge Alignment	Distance from the blade centerline to the leading edge of the blade
Erosion	Gradual wearing away or deterioration due to action of the elements
Exposure	Leaving material open to action of the elements
Face	The surface of the blade that is directed toward the rear of the aircraft. The face side is the high pressure, or thrusting, side of the blade. The blade airfoil sections are normally cambered or curved such that the face side of the blade may be flat or even concave in the midblade and tip region.
Face Alignment	Distance from the blade centerline to the highest point on the face side perpendicular to the chord line
Feathering	The capability of blades to be rotated parallel to the relative wind, thus reducing aerodynamic drag
Fraying	A raveling or shredding of material

Term	Definition
Fretting	Damage that develops when relative motion of small displacement takes place between contacting parts, wearing away the surface
Galling	To fret or wear away by friction
Gouge	Surface area where material has been removed
Hazardous Propeller Effect	The hazardous propeller effects are defined in Title 14 CFR section 35.15(g)(1)
Horizontal Balance	Balance between the blade tip and the center of the hub
Impact Damage	Damage that occurs when the propeller blade or hub assembly strikes, or is struck by, an object while in flight or on the ground
Inboard	Toward the butt of the blade
Intergranular Corrosion	Corrosion that attacks along the grain boundaries of metal alloys
Jog	A term used to describe movement up/down, left/right, or on/off in short incremental motions
Laminate	To unite composite material by using a bonding material, usually with pressure and heat
Lengthwise	A direction that is generally parallel to the pitch axis
Loose Material	Material that is no longer fixed or fully attached
Low Pitch	The lowest blade angle attainable by the governor for constant speed operation

Term	Definition
Major Propeller Effect	The major propeller effects are defined in Title 14 CFR section 35.15(g)(2)
Minor Deformation	Deformed material not associated with a crack or missing material
Monocoque	A type of construction in which the outer skin carries all or a major part of the load
Nick	Removal of paint and possibly a small amount of material
Non-Aviation Certified	Intended for non-aircraft application, such as Hovercraft or Wing-in-Ground effect (WIG) applications. These products are certificated by an authority other than FAA. The hub and blades will be stamped with an identification that is different from, but comparable to TC and PC.
Non-Aviation Experimental	Intended for non-aircraft application, such as Hovercraft or Wing-In-Ground effect (WIG) applications. Products marked with an "X" at or near the end of the model number or part number are not certified by any authority and are not intended for use on certificated craft.
Onspeed	Condition in which the RPM selected by the pilot through the propeller control/condition lever and the actual engine (propeller) RPM are equal
Open Circuit	Connection of high or infinite resistance between points in a circuit which are normally lower
Outboard	Toward the tip of the blade

Term	Definition
Overhaul	The periodic disassembly, inspection, repair, refinish, and reassembly of a propeller assembly to maintain airworthiness
Overspeed	Condition in which the RPM of the propeller or engine exceeds predetermined maximum limits; the condition in which the engine (propeller) RPM is higher than the RPM selected by the pilot through the propeller control/ condition lever
Pitch	Same as "Blade Angle"
Pitting	Formation of a number of small, irregularly shaped cavities in surface material caused by corrosion or wear
Pitting (Linear)	The configuration of the majority of pits forming a pattern in the shape of a line
Porosity	An aggregation of microvoids. See "voids".
Propeller Critical Parts	A part on the propeller whose primary failure can result in a hazardous propeller effect, as determined by the safety analysis required by Title 14 CFR section 35.15

Term	Definition
Reference Blade Radius	Refers to the propeller reference blade radius in an assembled propeller, e.g., 30-inch radius. A measurement from the propeller hub centerline to a point on a blade, used for blade angle measurement in an assembled propeller. An adhesive stripe (blade angle reference tape CM160) is usually located at the reference blade radius location. Note: Do not confuse *reference blade radius* with *blade station*; they may not originate at the same point.
Reversing	The capability of rotating blades to a position to generate reverse thrust to slow the aircraft or back up
Scratch	Same as "Nick"
Short Circuit	Connection of low resistance between points on a circuit between which the resistance is normally much greater
Shot Peening	Process where steel shot is impinged on a surface to create compressive surface stress, that provides improved strength and resistance to fatigue
Single Acting	Hydraulically actuated propeller that utilizes a single oil supply for pitch control
Split	Delamination of blade extending to the blade surface, normally found near the trailing edge or tip
Station Line	See "Blade Station"

Term	Definition
Synchronizing	Adjusting the RPM of all the propellers of a multi-engine aircraft to the same RPM
Synchrophasing	A form of propeller sychronization in which not only the RPM of the engines (propellers) are held constant, but also the position of the propellers in relation to each other
Ticking	A series of parallel marks or scratches running circumferentially around the diameter of the blade
Track	In an assembled propeller, a measurement of the location of the blade tip with respect to the plane of rotation, used to verify face alignment and to compare blade tip location with respect to the locations of the other blades in the assembly
Trailing Edge	The aft edge of an airfoil over which the air passes last
Trimline	Factory terminology referring to where the part was trimmed to length
Underspeed	The condition in which the actual engine (propeller) RPM is lower than the RPM selected by the pilot through the propeller control/condition lever
Unidirectional Material	A composite material in which the fibers are substantially oriented in the same direction
Variable Force	A force that may be applied or removed during propeller operation

Term	Definition
Vertical Balance	Balance between the leading and trailing edges of a two-blade propeller with the blades positioned vertically
Voids	Air or gas that has been trapped and cured into a laminate
Windmilling	The rotation of an aircraft propeller caused by air flowing through it while the engine is not producing power
Woven Fabric	A material constructed by interlacing fiber to form a fabric pattern
Wrinkle (aluminum blade)	A wavy appearance caused by high and low material displacement
Wrinkle (composite blade)	Overlap or fold within the material

16. Abbreviations (Rev. 2)

Abbreviation	Term
AD	Airworthiness Directives
AMM	Aircraft Maintenance Manual
AOG	Aircraft on Ground
AR	As Required
ATA	Air Transport Association
CSU	Constant Speed Unit
FAA	Federal Aviation Administration
FH	Flight Hour
FM	Flight Manual
FMS	Flight Manual Supplement
Ft-Lb	Foot-Pound
HMI	Human Machine Interface
ICA	Instructions for Continued Airworthiness
ID	Inside Diameter
In-Lb	Inch-Pound
IPL	Illustrated Parts List
IPS	Inches Per Second
kPa	Kilopascals
Lb(s)	Pound(s)
Max.	Maximum
Min.	Minimum
MIL-X-XXX	Military Specification

Abbreviation	Term
MPI	Major Periodic Inspection (Overhaul)
MS	Military Standard
MSDS	Material Safety Data Sheet
N	Newtons
N/A	Not Applicable
NAS	National Aerospace Standards
NASM	National Aerospace Standards, Military
NDT	Nondestructive Testing
NIST	National Institute of Standards and Technology
N•m	Newton-Meters
OD	Outside Diameter
OPT	Optional
PC	Production Certificate
PCP	Propeller Critical Part
PLC	Programmable Logic Controller
PMB	Plastic Media Blasting (Cleaning)
POH	Pilot's Operating Handbook
PSI	Pounds per Square Inch
RF	Reference
RPM	Revolutions per Minute
SAE	Society of Automotive Engineers
STC	Supplemental Type Certificate
TBO	Time Between Overhaul

Abbreviation	Term
TC	Type Certificate
TSI	Time Since Inspection
TSN	Time Since New
TSO	Time Since Overhaul
UID	Unique Identification
WIG	Wing-In-Ground-Effect

DESCRIPTION AND OPERATION - CONTENTS

LIST OF FIGURES

LIST OF TABLES

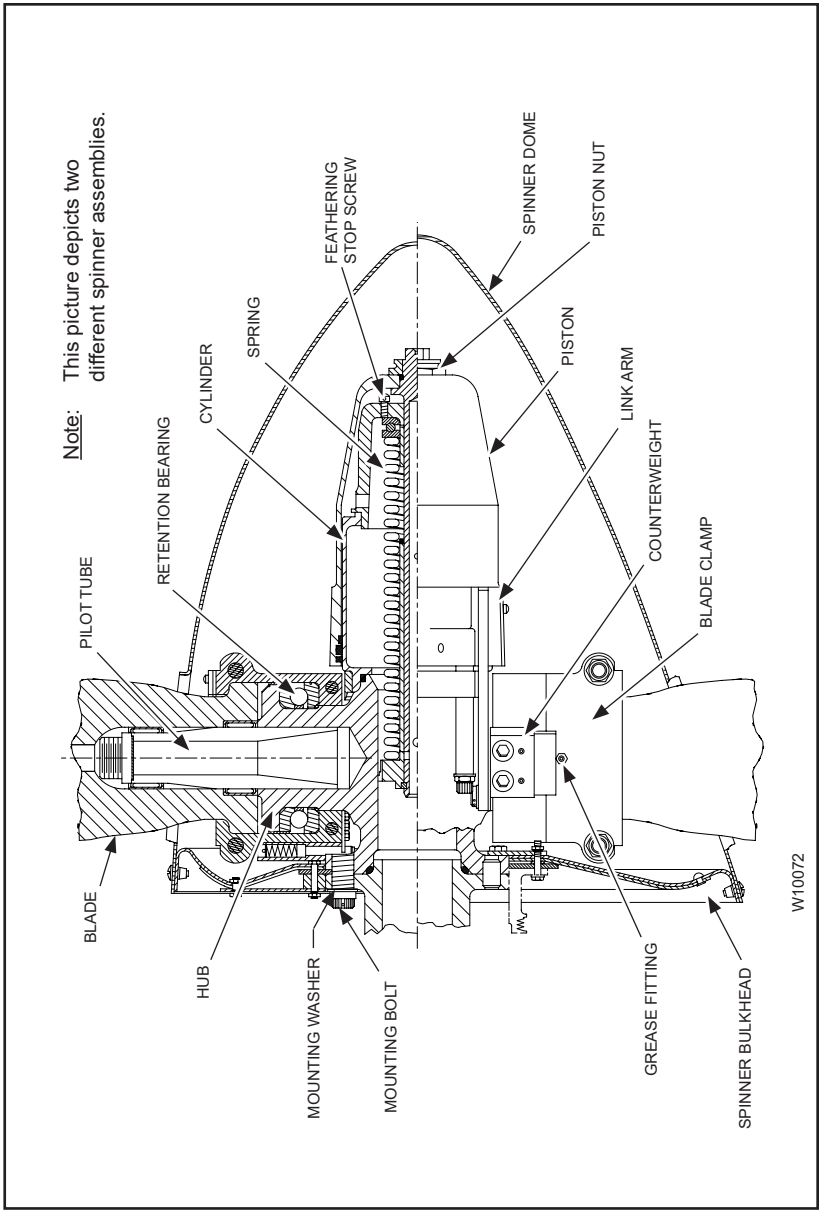

HC-B(3,5)( )( )-2( ) Propeller Assembly
Figure 2-1

1. Description of Propellers and Systems

   A. Feathering Propellers HC-B(3,5)( )( )-2( )

   Refer to Figure 2-1. The propellers described in this section are constant speed, feathering, and non-reversing. They use a single oil supply from a governing device to hydraulically actuate a change in blade angle. The propellers can have three or five blades, and they are used primarily on Pratt and Whitney turbine engines.

   Propeller blades and bearing assemblies are mounted on the arms of a steel hub unit (Figure 2-2) and are held in place by two-piece blade clamps. A cylinder is threaded onto the hub, and a feathering spring assembly is installed in the cylinder. A piston is placed over the cylinder and is connected by a link arm to each blade clamp. Propeller blade angle change is accomplished through the linear motion of the hydraulically actuated piston that is transmitted to each blade through the link arms and blade clamps.

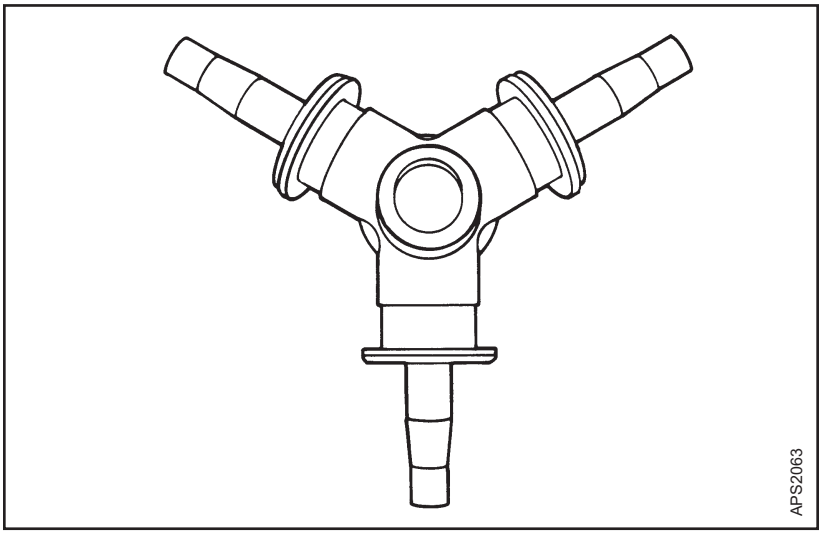

Steel Hub Unit
Figure 2-2

While the propeller is operating, the following forces are constantly present: 1) spring force, 2) counterweight force, 3) centrifugal twisting moment of each blade, and 4) blade aerodynamic twisting forces. The spring and counterweight forces attempt to rotate the blades to higher blade angle, while the centrifugal twisting moment of each blade is generally toward lower blade angle. Blade aerodynamic twisting force is usually very small in relation to the other forces and can attempt to increase or decrease blade angle.

The summation of the propeller forces is toward higher pitch (low RPM) and is opposed by a variable force toward lower pitch (high RPM). The variable force is oil under pressure from a governor with an internal pump, which is mounted on and driven by the engine. The oil from the governor is supplied to the propeller and hydraulic piston through a hollow engine shaft. Increasing the volume of oil within the piston and cylinder will decrease the blade angle and increase propeller RPM. Decreasing the volume of oil will increase blade angle and decrease propeller RPM. By changing the blade angle, the governor can vary the load on the engine and maintain constant engine RPM (within limits), independent of where the power lever is set. The governor uses engine speed sensing mechanisms that allow it to supply or drain oil as necessary to maintain constant engine speed (RPM).

If governor supplied oil is lost during operation, the propeller will increase pitch and feather. Feathering occurs because the summation of internal propeller forces causes the oil to drain out of the propeller until the feather stop position is reached.

Normal in-flight unfeathering is accomplished when the pilot positions the propeller condition lever into the normal flight (governing) range and restarts the engine. As engine speed increases, the governor supplies oil to the propeller, and the blade angle decreases.

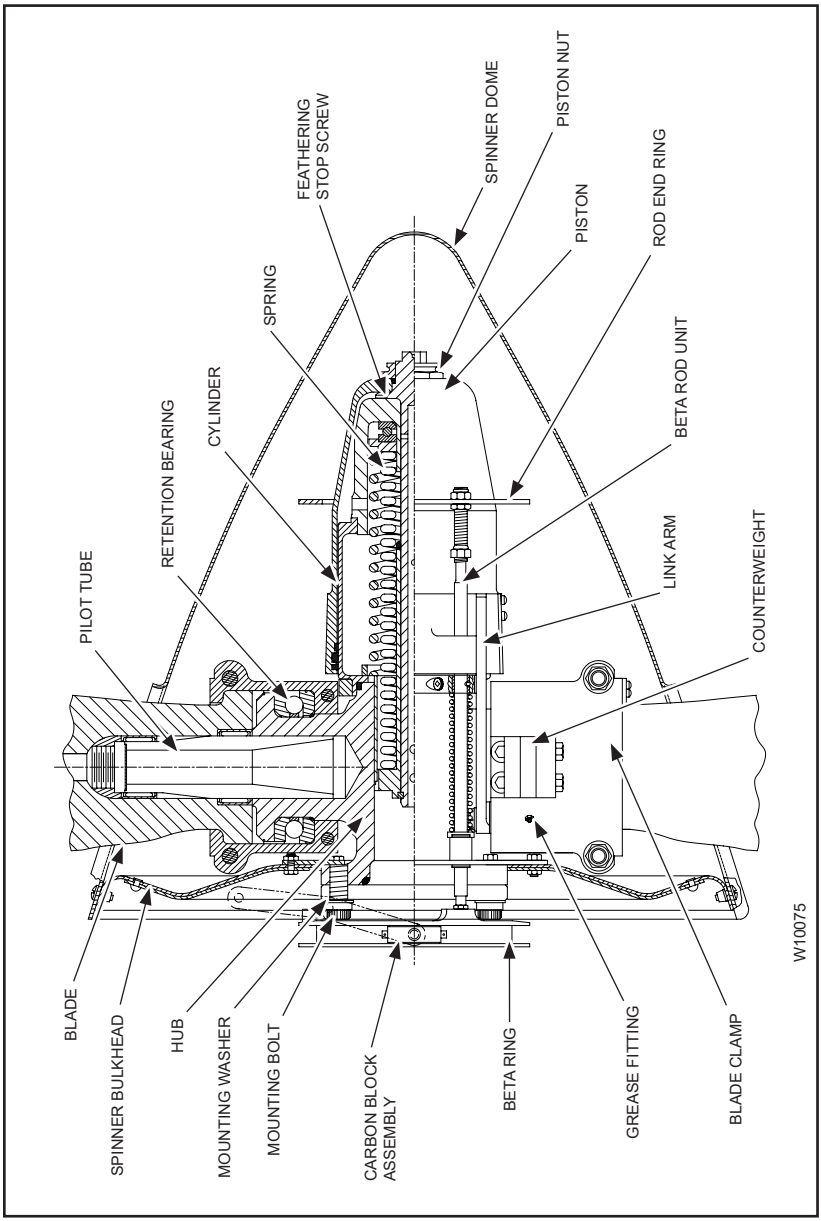

HC-B(3,4,5)( )( )-3( ) Propeller Assembly
Figure 2-3

B. Feathering and Reversing Propellers
HC-B(3,4,5)( )( )-3( ) Series (External Beta System)

Refer to Figure 2-3. The propellers described in this section are constant speed, feathering and reversing. They use a single oil supply from a governing device to hydraulically actuate a change in blade angle. The propellers can have three, four, or five blades, and they are used primarily on Pratt and Whitney and Walter turbine engines.

Propeller blades and bearing assemblies are mounted on the arms of a steel hub unit (Figure 2-2) and are held in place by two-piece blade clamps. A cylinder is threaded onto the hub, and a feathering spring assembly is installed in the cylinder. A piston is placed over the cylinder and is connected by a link arm to each blade clamp. Propeller blade angle change is accomplished through the linear motion of the hydraulically actuated piston that is transmitted to each blade through the link arms and blade clamps.

While the propeller is operating, the following forces are constantly present: 1) spring force, 2) counterweight force, 3) centrifugal twisting moment of each blade, and 4) blade aerodynamic twisting forces. The spring and counterweight forces attempt to rotate the blades to higher blade angle, while the centrifugal twisting moment of each blade is generally acting toward lower blade angle. Blade aerodynamic twisting force is usually very small in relation to the other forces and can attempt to increase or decrease blade angle.

The summation of the propeller forces is toward higher pitch (low RPM) and is opposed by a variable force toward lower pitch (high RPM). The variable force is oil under pressure from a governor with an internal pump, which is mounted on and driven by the engine. The oil from the governor is supplied to the propeller and hydraulic piston through a hollow engine shaft. Increasing the volume of oil within the piston and cylinder will decrease the blade angle and increase propeller RPM. Decreasing the volume of oil will increase blade angle and decrease propeller RPM. By changing the blade angle, the governor can vary the load on the engine and maintain constant engine RPM (within limits), independent of where the power lever is set. The governor uses engine speed sensing mechanisms that allow it to supply or drain oil as necessary to maintain constant engine speed (RPM).

If governor supplied oil is lost during operation, the propeller will increase pitch and feather. Feathering occurs because the summation of internal propeller forces causes the oil to drain out of the propeller until the feather stop position is reached.

Normal in-flight feathering is accomplished when the pilot retards the propeller condition lever past the feather detent. This allows control oil to drain from the propeller and return to the engine sump. Engine shutdown is normally accomplished during the feathering process.

Normal in-flight unfeathering is accomplished when the pilot positions the propeller condition lever into the normal flight (governing) range and restarts the engine. As engine speed increases, the governor supplies oil to the propeller, and the blade angle decreases.

In reverse mode of operation, the governor operates in an underspeed condition to act strictly as a source of pressurized oil, without attempting to control RPM. Control of the propeller blade angle in reverse is accomplished through the beta valve.

NOTE: The beta valve is normally built into the base of the governor.

The propeller is reversed by manually repositioning the cockpit-control to cause the beta valve to supply oil from the governor pump to the propeller. An external propeller feedback mechanism, which include a beta ring and carbon block assembly, communicate propeller blade angle position to the beta valve.

When the propeller reaches the desired reverse position, movement of the beta ring and carbon block assembly, initiated by the propeller piston, causes the beta valve to shut off the flow of oil to the propeller. Any additional unwanted movement of the propeller toward reverse, or any movement of the manually positioned beta valve control toward high pitch position will cause the beta valve to drain oil from the propeller to increase pitch.

With some applications, it is undesirable to feather the propeller when the engine is stopped after landing the aircraft.

To prevent feathering during normal engine shutdown, the propeller incorporates spring-energized latch pins called start lock units (Figure 2-4). These units are installed either on a two-piece spinner mounting plate or on the spinner bulkhead, which is bolted to the propeller hub flange. If propeller rotation is approximately 800 RPM or above, the start lock units are disengaged from the blade clamp mounted plates by centrifugal force acting on the latch pins to compress the springs (within the units). When the RPM drops below 800, the springs overcome the centrifugal force and move the latch pins to engage the clamp-mounted plate, preventing blade angle movement to feather.

Shortly after engine start-up, with the propeller RPM above 800, the latch pins in the start lock units will still retain the blade angle. To release the latch pins, it is necessary to manually actuate the propeller slightly toward reverse. This will move the clamp-mounted plate, allowing the latch pins to slide freely. Centrifugal force will compress the springs and disengage the pins from the plate.

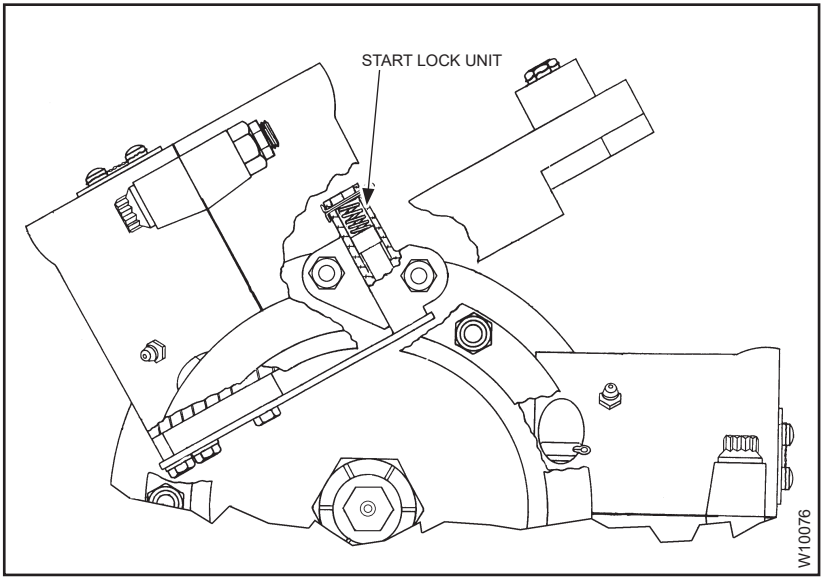

Start Lock Unit on HC-B(3,4,5)( )( )-3( ) Propeller Assembly
Figure 2-4

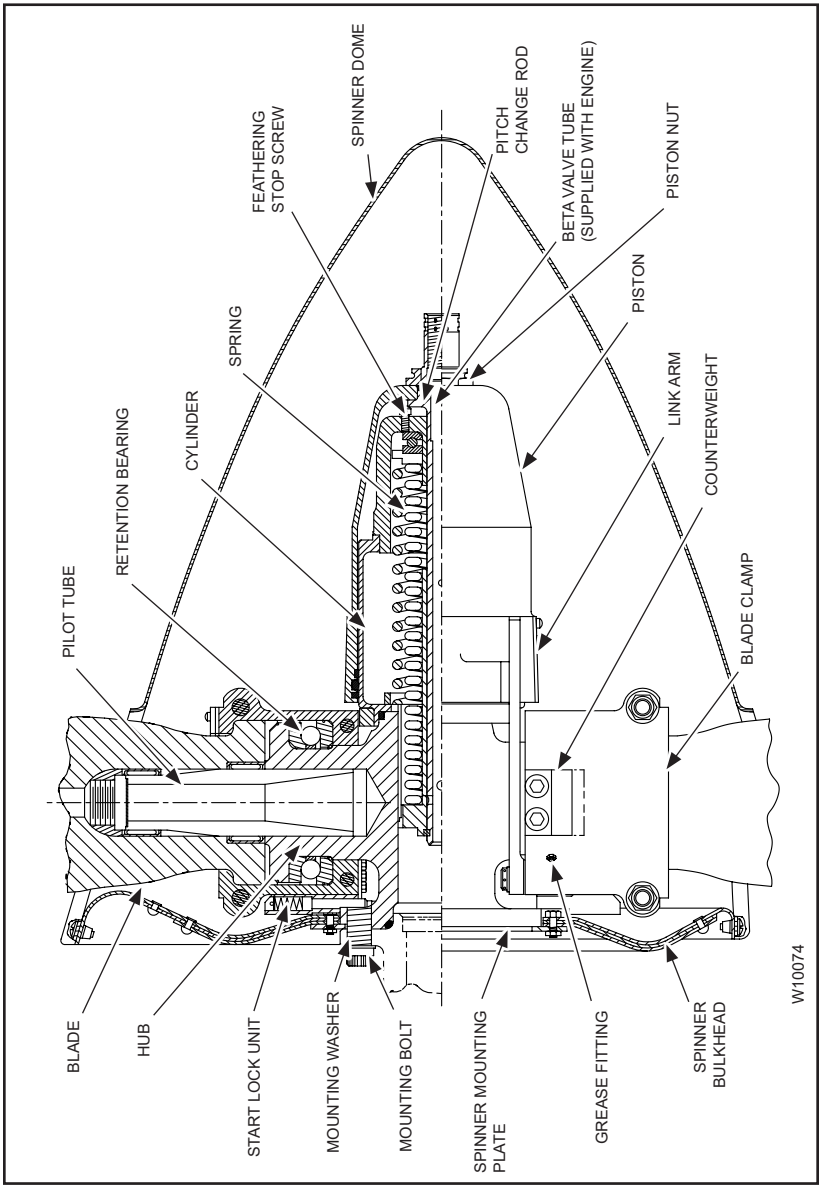

HC-B(3,4)( )( )-5( ) Propeller Assembly with One-piece Spinner Mounting Plate
Figure 2-5

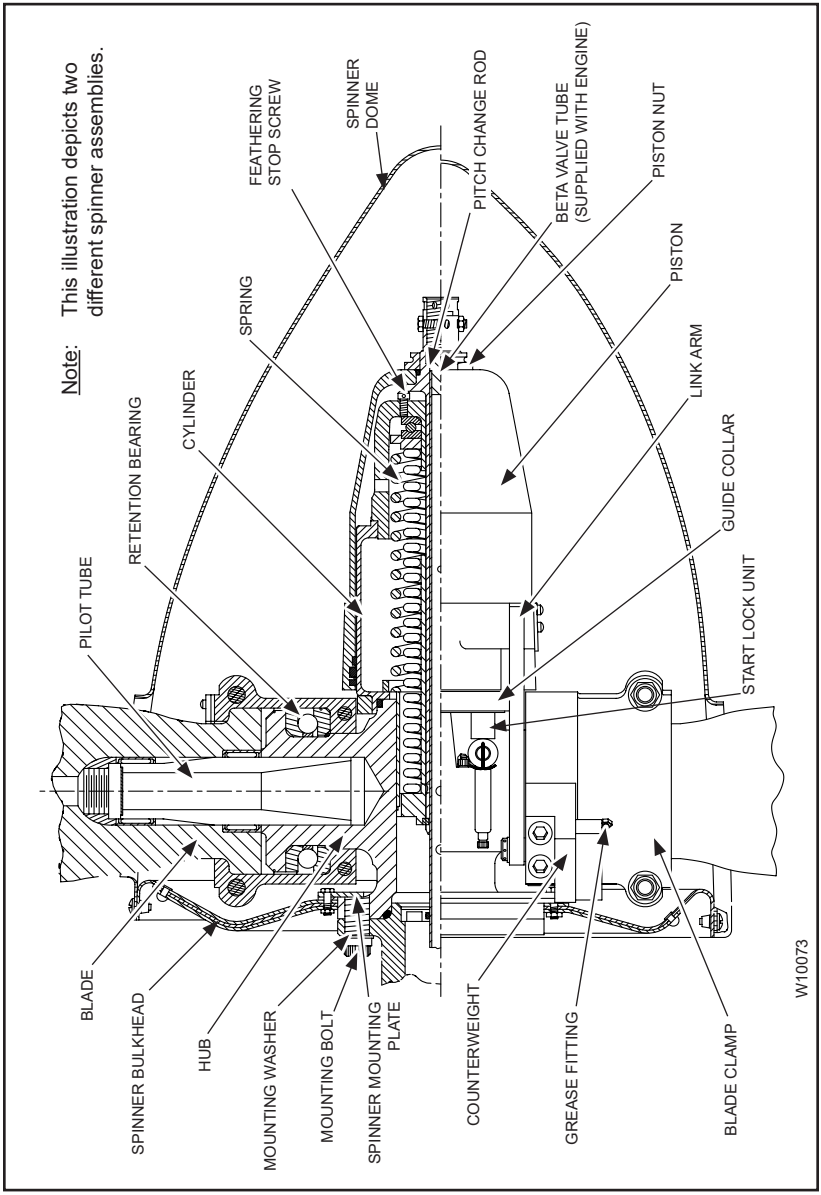

HC-B3( )( )-5( ) Propeller Assembly with Two-piece Spinner Mounting Plate
Figure 2-6

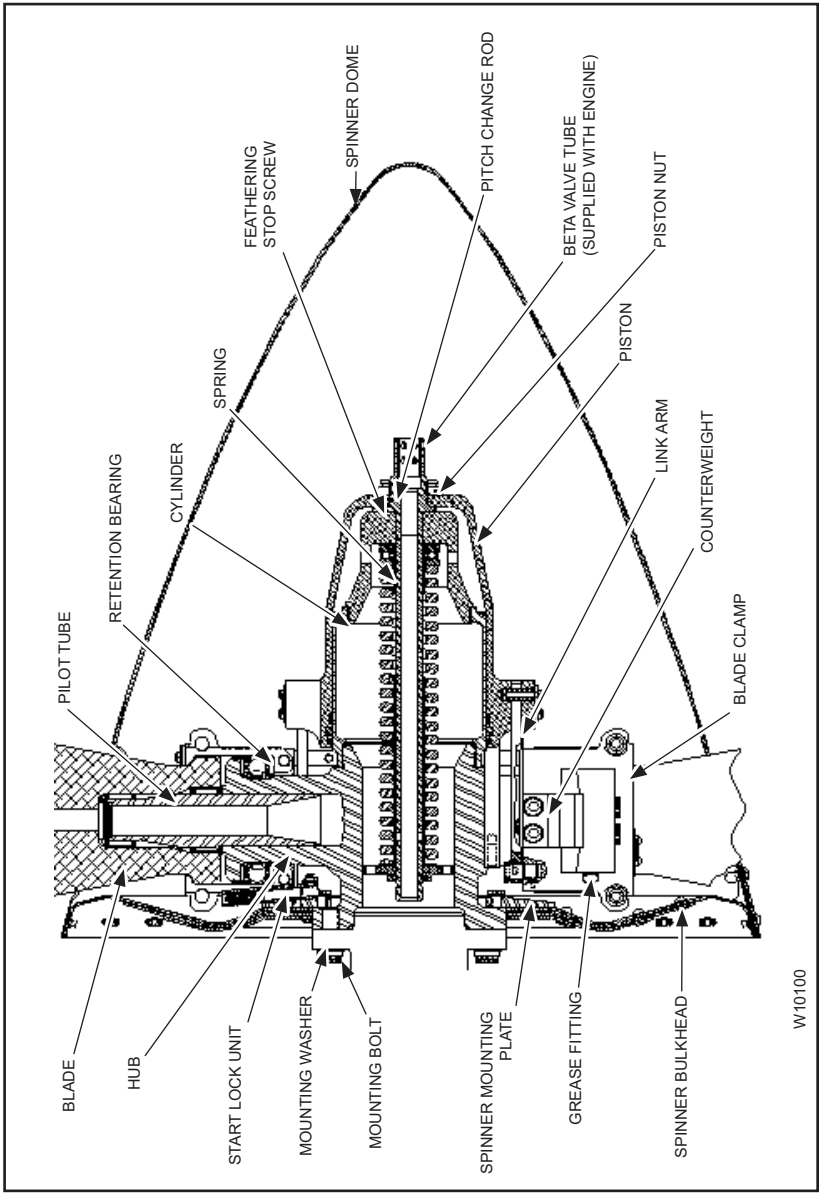

HC-B(4,5)( )( )-5( ) Propeller Assembly with Two-piece Spinner Mounting Plate
Figure 2-7

C. Feathering and Reversing Propellers
HC-B(3,4,5)( )( )-5( ) Series (Internal Beta System)

Refer to Figures 2-5 through 2-7. The propellers described in this section are constant speed, feathering and reversing. They use a single oil supply from a governing device to hydraulically actuate a change in blade angle. The propellers can have three, four, or five blades, and are used primarily on Garrett (Allied Signal) turbine engines.

Propeller blades and bearing assemblies are mounted on the arms of a steel hub unit (Figure 2-2) and are held in place by two-piece blade clamps. A cylinder is threaded onto the hub, and a feathering spring assembly is installed in the cylinder. A piston is placed over the cylinder and is connected by a link arm to each blade clamp. Propeller blade angle change is accomplished through the linear motion of the hydraulically actuated piston that is transmitted to each blade through the link arms and blade clamps.

While the propeller is operating, the following forces are constantly present: 1) spring force, 2) counterweight force, 3) centrifugal twisting moment of each blade, and 4) blade aerodynamic twisting forces. The spring and counterweight forces attempt to rotate the blades to higher blade angle, while the centrifugal twisting moment of each blade is generally toward lower blade angle. Blade aerodynamic twisting force is usually very small in relation to the other forces and can attempt to increase or decrease blade angle.

The summation of the propeller forces is toward higher pitch (low RPM) and is opposed by a variable force toward lower pitch (high RPM). The variable force is oil under pressure from a governor with an internal pump, which is mounted on and driven by the engine. The oil from the governor is supplied to the propeller and hydraulic piston through a hollow engine shaft. Increasing the volume of oil within the piston and cylinder will decrease the blade angle and increase propeller RPM. Decreasing the volume of oil will increase blade angle and decrease propeller RPM. By changing the blade angle, the governor can vary the load on the engine and maintain constant engine RPM (within limits), independent of where the power lever is set. The governor uses engine speed sensing mechanisms that allow it to supply or drain oil as necessary to maintain constant engine speed (RPM).

If governor supplied oil is lost during operation, the propeller will increase pitch and feather. Feathering occurs because the summation of internal propeller forces causes the oil to drain out of the propeller until the feather stop position is reached.

Normal in-flight feathering is accomplished when the pilot places the propeller condition lever into feather position. This allows control oil to drain from the propeller and return to the engine sump. Engine shutdown is normally accomplished during the feathering process.

Normal in-flight unfeathering is accomplished when the pilot positions the propeller condition lever into the normal flight (governing) range, activates the auxiliary pump to decrease blade pitch, and restarts the engine. As engine speed increases, the governor supplies oil to the propeller, and the blade angle decreases until it reaches an onspeed condition.

In reverse mode of operation, the governor operates in an underspeed condition to act strictly as a source of pressurized oil, without attempting to control RPM. Control of the propeller blade angle in reverse is accomplished through the beta valve.

NOTE: The beta valve is normally located on the side of the gearbox opposite the propeller.

The propeller is reversed by manually repositioning the power lever within the beta range to cause the beta valve to supply oil from the governor pump to the propeller. A beta rod inserted into the front of the propeller communicates propeller blade angle position to the beta valve. When the propeller reaches the desired reverse position, movement of the beta rod causes the beta valve to shut off the flow of oil to the propeller. Any additional unwanted movement of the propeller toward reverse, or any movement of the manually positioned beta valve control toward high pitch position will cause the beta valve to drain oil from the propeller to increase pitch.

It is undesirable to feather the propeller when the engine is stopped after landing the aircraft. This propeller type is normally installed on a fixed shaft engine that causes the propeller to rotate during an engine start process. If the propeller is in feather position, an overload on the electric engine starter will occur.

To prevent feathering during normal engine shutdown, the propeller incorporates spring-energized latch pins called start lock units. These units are installed either on a two-piece spinner mounting plate or on the spinner bulkhead, which is bolted to the propeller hub flange. If propeller rotation is approximately 800 RPM or above, the start lock units are disengaged from the blade clamp mounted plates by centrifugal force acting on the latch pins to compress the springs (within the units). When the RPM drops below 800, the springs overcome the centrifugal force and move the latch pins to engage the clamp-mounted plate, preventing blade angle movement to feather.

CAUTION: RELEASING THE START LOCKS AT SIGNIFICANTLY HIGHER THAN 800 RPM OR AT HIGH RPM CAN CAUSE DAMAGE TO THE START LOCKS.

Shortly after engine start-up, with the propeller RPM above 800, the latch pins in the start lock units will still retain the blade angle. To release the latch pins, it is necessary to manually actuate the propeller slightly toward reverse. This will move the clamp-mounted plate, allowing the latch pins to slide freely. Centrifugal force will compress the springs and disengage the pins from the plate.

Hartzell Propeller -5 series propellers incorporated various start lock unit configurations.

(1) Certain three-bladed and four-bladed propellers incorporate a one-piece spinner mounting plate that is pinched between the hub and engine flanges. The start lock units are installed on the spinner bulkhead.

NOTE: The one-piece spinner mounting plate was superseded by a two-piece spinner mounting plate on current production propellers.

(2) Current production of four-bladed and five-bladed propellers incorporate a two-piece spinner mounting plate that bolts onto the propeller hub flange. The start lock units are installed onto the spinner mounting plate.

(3) Current production of three-bladed propellers incorporate a two-piece spinner mounting plate that bolts onto the propeller hub flange. The start lock units are mounted on the guide collar.

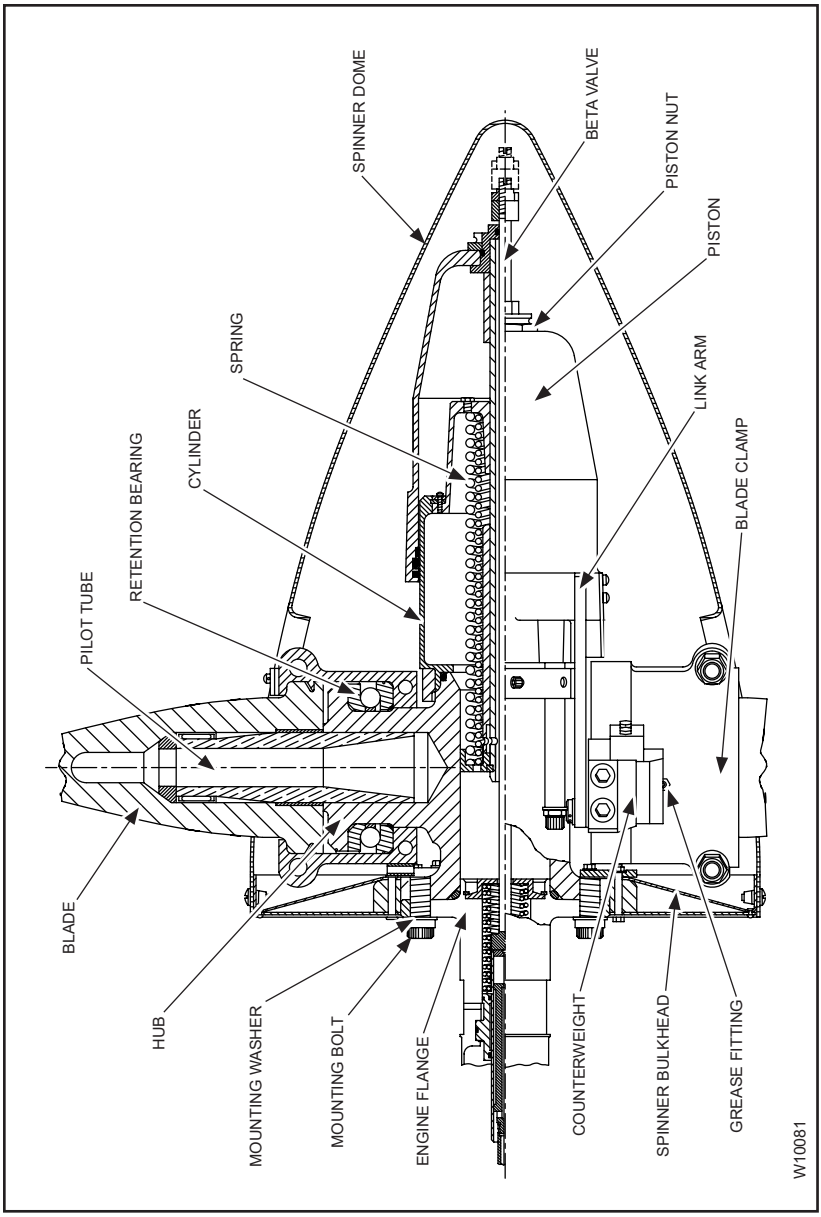

HC-A3VF-7( ) Propeller Assembly
Figure 2-8

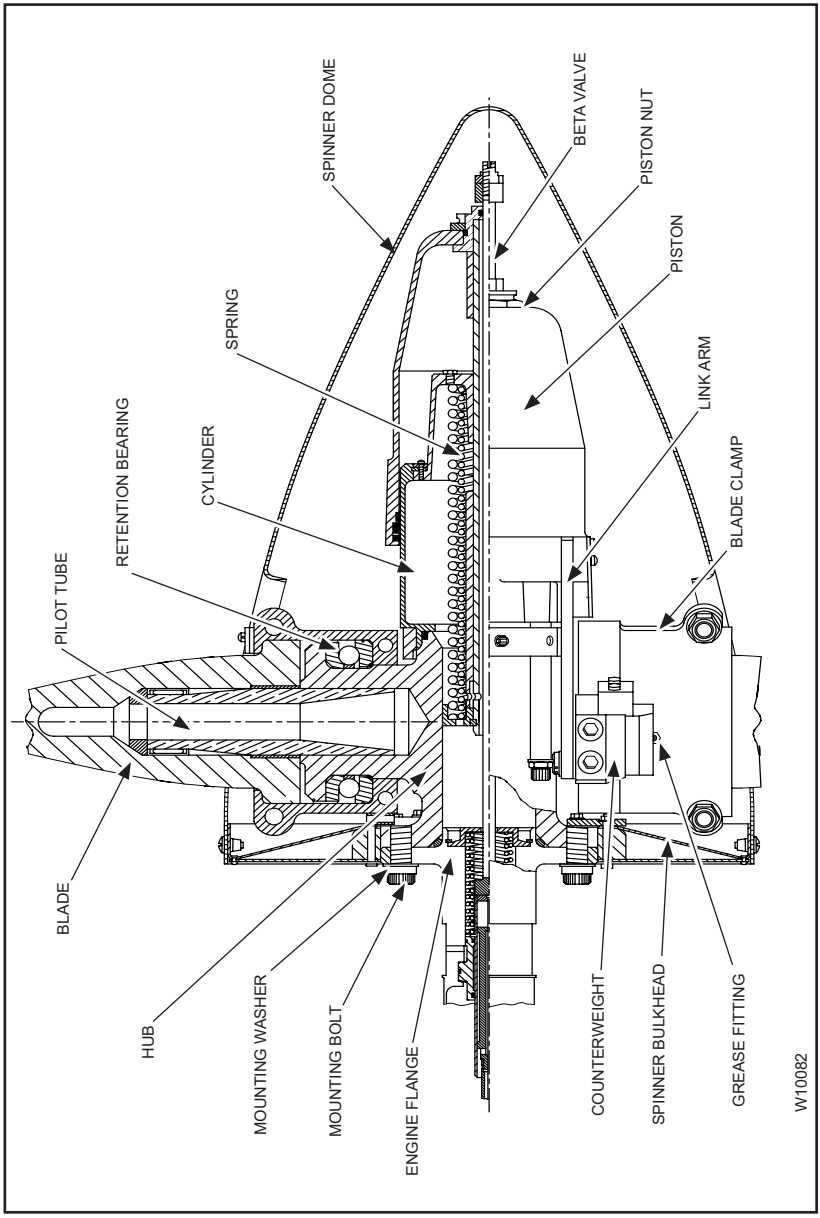

HC-A3MVF-7( ) and HC-B3TF-7( ) Propeller Assembly
Figure 2-9

D. Feathering and Reversing Propellers
HC-( )3( )( )-7( ) Series (Beta Valve System)

Refer to Figures 2-8 and 2-9. The propellers described in this section are constant speed, feathering and reversing. They use a single oil supply from a governing device to hydraulically actuate a change in blade angle. The propellers have three blades, and are used primarily on Allison 250B17( ) series turbine engines.

Propeller blades and bearing assemblies are mounted on the arms of a steel hub unit (Figure 2-2) and are held in place by two-piece blade clamps. A cylinder is threaded onto the hub, and a feathering spring assembly is installed in the cylinder. A piston is placed over the cylinder and is connected by a link arm to each blade clamp. Propeller blade angle change is accomplished through the linear motion of the hydraulically actuated piston that is transmitted to each blade through the link arms and blade clamps.

While the propeller is operating, the following forces are constantly present: 1) spring force, 2) counterweight force, 3) centrifugal twisting moment of each blade, and 4) blade aerodynamic twisting forces. The spring and counterweight forces attempt to rotate the blades to higher blade angle, while the centrifugal twisting moment of each blade is generally toward lower blade angle. Blade aerodynamic twisting force is usually very small in relation to the other forces and can attempt to increase or decrease blade angle.

The summation of the propeller forces is toward higher pitch (low RPM) and is opposed by a variable force toward lower pitch (high RPM). The variable force is oil under pressure from a governor with an internal pump, which is mounted on and driven by the engine. The oil from the governor is supplied to the propeller and hydraulic piston through a hollow engine shaft. Increasing the volume of oil within the piston and cylinder will decrease the blade angle and increase propeller RPM. Decreasing the volume of oil will increase blade angle and decrease propeller RPM. By changing the blade angle, the governor can vary the load on the engine and maintain constant engine RPM (within limits), independent of where the power lever is set. The governor uses engine speed sensing mechanisms that allow it to supply or drain oil as necessary to maintain constant engine speed (RPM).

If governor supplied oil is lost during operation, the propeller will increase pitch and feather. Feathering occurs because the summation of internal propeller forces causes the oil to drain out of the propeller until the feather stop position is reached.

Normal in-flight feathering is accomplished when the pilot retards the propeller condition lever past the feather detent. This allows control oil to drain from the propeller and return to the engine sump. Engine shutdown is normally accomplished during the feathering process.

Normal in-flight unfeathering is accomplished when the pilot positions the propeller condition lever into the normal flight (governing) range, activates the auxiliary pump to decrease blade pitch, and restarts the engine. As engine speed increases, the governor supplies oil to the propeller, and the blade angle decreases.

In reverse mode of operation, the governor is reset to act as a source of pressurized oil. Control of the propeller then is transferred to the beta valve.

The propeller is reversed by manually repositioning the cockpit-controlled cable to cause the beta valve to port oil from the governor pump to the propeller.

When the propeller reaches desired reverse position, movement of the beta feedback system will cause the beta valve to shut off flow of oil to the propeller. Any further unwanted movement of the propeller toward reverse or any movement of the manually positioned cable toward high pitch position will cause the beta valve to drain oil from the propeller to increase pitch.

E. Propeller Model Designation

(1) Hartzell Propeller uses a model number designation system to identify specific propeller and blade assemblies. The propeller model number and blade model number are separated by a slash (/).

(a) Example: *propeller model number / blade model number*

(2) The propeller model number is impression stamped on the propeller hub.

(3) Refer to Table 2-1 for a description of the characters used in the propeller model number.

HC - B 3 T N - 3 DY

- **DY** — MINOR MODIFICATIONS SEE NEXT PAGE
- **3** — SPECIFIC DESIGN FEATURES
  - **2** - CONSTANT SPEED, FEATHERING, PT-6
  - **3** - CONSTANT SPEED, FEATHERING, REVERSING PT-6 & LTP101 & M601; EXTERNAL BETA RING
  - **5** - CONSTANT SPEED, FEATHERING, REVERSING, INTERNAL BETA SYSTEM, START LOCKS, TPE-331
  - **7** - CONSTANT SPEED, FEATHERING, REVERSING, ALLISON ENGINES, INTERNAL BETA SYSTEM, BETA VALVE C-3630( )
- **N** — MOUNTING FLANGE

	BOLT CIRCLE	DOWELS NO.	DOWELS DIA.	NO. OF BOLTS OR STUDS
A	5.125 in.	2	5/8	12 (9/16")
F	4.00 in.	2	1/2	6 (1/2")
N	4.25 in.	2	1/2	8 (9/16")
P	4.25 in.	4	1/2	8 (9/16")
W	4.25 in.	4	1/2	8 (9/16")*

* HC-B( )( )W-3( ) requires the use of C-7364-2 spacer.

- **T** — BASIC SHANK
  - **M** - TWO NEEDLE BEARINGS, C-1977 CLAMP
  - **T** - TWO NEEDLE BEARINGS, C-1301 CLAMP
  - **V** - NEEDLE BEARING, C-3 CLAMP, DOUBLE SHOULDER RETENTION
  - **MV** - NEEDLE BEARING, D-6831( ) CLAMP,MODIFIED V SHANK, SINGLE SHOULDER RETENTION
- **3** — NO. OF BLADES: **3, 4, OR 5**
- **B** — BASIC DESIGN
  - **A** - DOUBLE SHOULDER RETENTION (V SHANK) SINGLE SHOULDER RETENTION (MV SHANK)
  - **B** - SINGLE SHOULDER RETENTION (T and M SHANK)
- **HC** — HC - HARTZELL CONTROLLABLE

Propeller Model Designations
Table 2-1

HC - B 3 T N - 3 DY

MINOR MODIFICATIONS

HC-A3VF-7
A - ADDITION OF A-1869 SPACER - NONFEATHERING
B - 838-113 CLAMP ASSEMBLY, B-3663-3 SLUGS (SI 151)

HC-B3TF-7
A - 838-93 CLAMP ASSEMBLY 1835-39 SPINNER, A3491 SPINNER MOUNTING KIT
B - ADDITION OF A-1869 SPACER - NONFEATHERING
C - A-719 WASHERS
L - LEFT HAND ROTATION

HC-B3(T,W)N-2
B - NONPOLISHED SPINNER, SWEARINGEN
L - LEFT HAND ROTATION

HC-B3TN-3
A - 831-23A, -47, -46 SPRING ASSEMBLY 3 SPRINGS, OLD RODS
B - B-3475A-2 LOW STOP ROD UNIT ALTERNATE B-3475-2, B-3002-2
C - SAME AS -3B EXCEPT 831-23A,-47, -46 SPRING ASSEMBLY 3 SPRINGS NEW RODS
D - SAME AS -3C EXCEPT 831-33 SPRING ASSEMBLY
E - SAME AS -3A EXCEPT B-3475A-10 LOW STOP ROD UNIT ALTERNATE B-3475-10, B-3002-10
F - SAME AS -3E EXCEPT 838-88 CLAMP ASSEMBLY (SAME AS -3E EXCEPT COUNTERWEIGHTS)
G - SAME AS -3C EXCEPT 838-88 CLAMP ASSEMBLY (SAME AS -3C EXCEPT COUNTERWEIGHTS)
H - SAME AS -3B EXCEPT COUNTERWEIGHT SLUGS AND COUNTERWEIGHT ANGLE
K - SAME AS -3C EXCEPT EXT. FEATHER STOP (B-1368-14 PISTON)
L - LEFT HAND ROTATION
M - SAME AS -3B EXCEPT EXT. FEATHER STOP (B-1368-14 PISTON)
N - SAME AS -3G EXCEPT EXT. FEATHER STOP (B-1368-14 PISTON)
P - SAME AS -2H EXCEPT EXT. FEATHER STOP (B-1368-14 PISTON)
S - STOP MOUNTING KIT A-3432-3
Y - STOP MOUNTING KIT

HC-B5MA-3
A - SAME AS -3 EXCEPT BLADE ANGLE SETUP, BLADES AND COUNTERWEIGHTS
B - SAME AS -3 EXCEPT D-5574P SPINNER ASSEMBLY AND BLADE ANGLE SETUP
C - SAME AS -3 EXCEPT D-5497-1 SPINNER ASSEMBLY AND BLADE ANGLE SETUP
D - SAME AS -3 EXCEPT BLADE ANGLE SETUP
J - SAME AS -3B EXCEPT 838-107 CLAMP ASSEMBLY AND BLADE ANGLE SETUP
M - SAME AS -3 EXCEPT BLADE ANGLE SETUP, BLADES AND COUNTERWEIGHTS

HC-B3TN-5
C - PRP-914-21 PILOT TUBE 'O' RING, 831-30, -48, -45 SPRING ASSEMBLY
D - SAME AS -5C EXCEPT 838-71 CLAMP ASSEMBLY
E - SAME AS -5C EXCEPT 1368-12 PISTON ASSEMBLY
F - SAME AS -5D EXCEPT 1368-12 PISTON ASSEMBLY
G - SAME AS -5E EXCEPT A-3757 STOP PLATES AND 831-38, 48, -45 SPRING ASSEMBLY
K - SAME AS -5F EXCEPT 838-95 CLAMP ASSEMBLY AND NO. 831-30 SPRING ASSEMBLY
L - LEFT HAND ROTATION
M - 830-36 OR -37 STOP UNIT FOR -5C, -5E, -5G
N - 830-36 OR -37 STOP UNIT FOR -5D, -5F
P - 830-36, OR -37 STOP UNIT FOR -5K

HC-B3MN-5
L - LEFT HAND ROTATION

HC-B4MN-3
A - 838-103 CLAMP ASSEMBLY
L - LEFT HAND ROTATION

Propeller Model Designations, Continued
Table 2-1

HC - B 3 T N - 3 DY

MINOR MODIFICATIONS, CONTINUED

HC-B4MN-5
A - 834-13 STOP COLLAR, A-3495 STOP PLATE, 838-97L CLAMP ASSEMBLY, 832-44L PISTON ASSEMBLY
L - LEFT HAND ROTATION

HC-B4MP-3
A - D-4846P SPINNER ASSEMBLY. 838-109 CLAMP ASSEMBLY
B - B-3334 LOW STOP COLLAR
C - D-5519P SPINNER ASSEMBLY
L - LEFT HAND ROTATION

HC-B4TN-3
A - B-3475-3 LOW STOP ROD UNIT ALTERNATE B-3475-3, B-3002-3, B-3001-3 COLLAR, OPTIONAL 838-89 CLAMP ASSEMBLY
B - SAME AS -3A EXCEPT B-3334 COLLAR
C - SAME AS -3A EXCEPT 838-105 CLAMP ASSEMBLY
L - LEFT HAND ROTATION

HC-B4TW-3
(NO MINOR MODIFICATIONS APPLY)

HC-B4TN-5
A - MINOR MODIFICATION
C - PRP-914-21 PILOT TUBE 'O' RING (C & subsequent)
D - SAME AS -5CL EXCEPT 838-92 CLAMP
E - SAME AS -5D EXCEPT 838-98 CLAMP & SPINNER
F - SAME AS -5C EXCEPT 830-34 STOP UNIT
G - SAME AS -5D EXCEPT A-3495 STOP PLATE, 830-34 STOP UNIT
H - SAME AS -5EL EXCEPT A-3495 STOP PLATE
J - SAME AS -5G EXCEPT 832-44 PISTON ASSEMBLY
K - SAME AS -5H EXCEPT 832-44 PISTON ASSEMBLY
L - LEFT HAND ROTATION
M - SAME AS -5J EXCEPT D-3434-7P SPINNER ASSEMBLY
N - SAME AS -5K EXCEPT BLADES AND COUNTERWEIGHT

HC-B5MP-3
A - C-3317-121 PILOT TUBE O-RING, A880-2A PISTON NUT, 831-50 SPRING ASSEMBLY, 832-39 PISTON ASSEMBLY, 834-19 GUIDE COLLAR, C-4019-1 LOW STOP COLLAR
B - SAME AS -3A EXCEPT 831-51 SPRING ASSEMBLY
C - SAME AS -3A EXCEPT 838-107 CLAMP ASSEMBLY
L - LEFT HAND ROTATION

HC-B5MA-5
A - SAME AS -5 EXCEPT BLADE ANGLE SETUP

Propeller Model Designations, Continued
Table 2-1

2. Propeller Blades
   A. Description of Aluminum Blades
      (1) Aluminum propeller blades are manufactured from one solid piece of aluminum that has been forged and heat-treated prior to manufacture.
      (2) Aluminum blades are identified by shank design, propeller diameter, tip configurations, and other blade characteristics.
         (a) Refer to the section, "Blade Model Designation" in this chapter.
   B. Blade Model Designation
      (1) Hartzell Propeller uses a model number designation system to identify specific propeller and blade assemblies. The propeller model number and blade model number are separated by a slash (/).
         (a) Example: *propeller model number / blade model number*
      (2) The blade model number is impression stamped on the butt end of the blade, and also identified by a label on the cylinder.
      (3) Refer to the applicable table for a description of the characters used in the blade model number:
         (a) Aluminum blades: Refer to Table 2-2

prop model/M11276NK-3

Dash Number (or + number), diameter reduction (or increase) from basic design. In this example, the nominal 112 inch diameter has been reduced 3 inches = 109 inch dia. (with some exceptions) there may be a letter following the dash number:
R - specifically rounded tip
Q - Q-tip, factory 90 degree bent tip
A - slightly thinner & narrower tip fairing
E - elliptical tip

Suffix letters:
A - blade dimensional modification from basic design
B - anti-ice boot (alcohol) or de-ice boot (wire element)
C - blade dimensional modification from basic design
D - blade dimensional modification from basic design
E - de-ice boot (foil element) or internal de-ice element (composite blade)
F - blade dimensional modification from basic design
H - hard alloy (7076)
K - de-ice boot installed (foil element, different PN from B above)
N - shank modification (pilot tube hole)
R - rounded tips
S - square tips or; shot peening of blade surface
blank - original design, no changes

The first 2 or 3 numbers indicate initial design diameter (in inches), the last 2 numbers indicate basic model or template (there are some exceptions to this definition)

Prefix of up to 3 letters:
L - left hand rotation
V,MV,M,P,T - shank design

Aluminum Blade Model Designations
Table 2-2

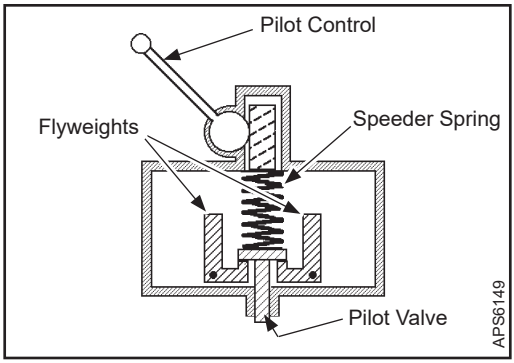

Governor in Onspeed Condition
Figure 2-10

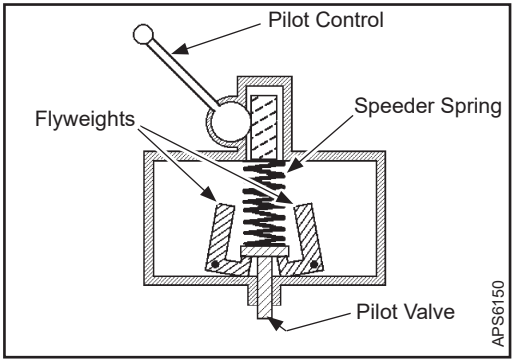

Governor in Underspeed Condition
Figure 2-11

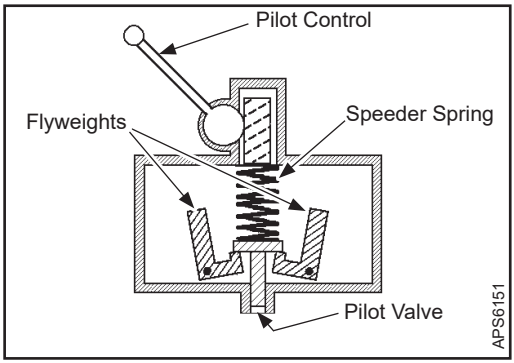

Governor in Overspeed Condition
Figure 2-12

3. Governors (Rev. 3)

A. Theory of Operation

(1) A governor is an engine RPM sensing device and high pressure oil pump. In a constant speed propeller system, the governor responds to a change in engine RPM by directing oil under pressure to the propeller hydraulic cylinder or by releasing oil from the hydraulic cylinder. The change in oil volume in the hydraulic cylinder changes the blade angle and maintains the propeller system RPM to the set value. The governor is set for a specific RPM via the cockpit propeller control, that compresses or releases the governor speeder spring.

(2) When the engine is operating at the RPM set by the pilot using the cockpit control, the governor is operating **onspeed**. Refer to Figure 2-10. In an onspeed condition, the centrifugal force acting on the flyweights is balanced by the speeder spring, and the pilot valve is neither directing oil to nor from the propeller hydraulic cylinder.

(3) When the engine is operating below the RPM set by the pilot using the cockpit control, the governor is operating **underspeed**. Refer to Figure 2-11. In an underspeed condition, the flyweights tilt inward because there is not enough centrifugal force on the flyweights to overcome the force of the speeder spring. The pilot valve, forced down by the speeder spring, meters oil flow to decrease propeller pitch and raise engine RPM.

(4) When the engine is operating above the RPM set by the pilot using the cockpit control, the governor is operating **overspeed**. Refer to Figure 2-12. In an overspeed condition, the centrifugal force acting on the flyweights is greater than the speeder spring force. The flyweights tilt outward, and raise the pilot valve. The pilot valve then meters oil flow to increase propeller pitch and lower engine RPM.

(5) Feathering governors allow oil to be pushed from the propeller to the engine drain to increase propeller pitch to feather.

(a) Some governors will move the propeller to feather by electrically or mechanically actuating a valve that opens to drain the oil supply between the propeller and governor to increase propeller pitch and allow the propeller to feather.

(b) Figure 2-13 illustrates another feathering propeller governor system. When it is desired to feather the propeller, the lift rod may be moved by the cockpit control to mechanically engage the valve. The lifted valve dumps oil to increase propeller pitch until the propeller feathers.

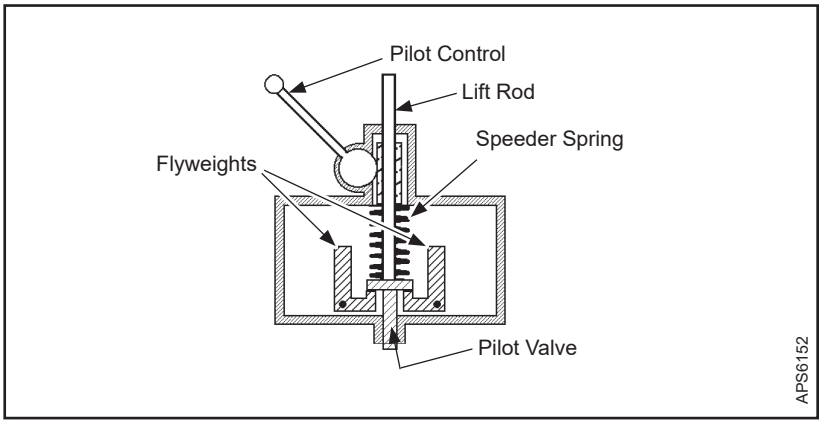

Feathering Governor
Figure 2-13

(6) A synchronizing system can be employed in a multi-engine aircraft to keep the engines operating at the same RPM. A synchrophasing system not only keeps the RPM of the engines consistent, but also keeps the propeller blades in phase with each other. Both synchronizing and synchrophasing systems serve to reduce noise and vibration. Figure 2-14 illustrates a governor as a component of a synchronizing or synchrophasing system.

(a) Hartzell Propeller synchronizing or synchrophasing systems use one engine (the master engine) as an RPM and phase reference and adjust the RPM of the remaining engine(s) [slave engine(s)] to match it. The RPM of the master engine is monitored electronically, and this information is used to adjust the voltage applied to the electrical coil on the slave governor(s). The voltage to the coil either raises or lowers a rod which changes the force of the speeder spring. In this manner, engine RPM and phase of the propellers is synchronized or synchrophased.

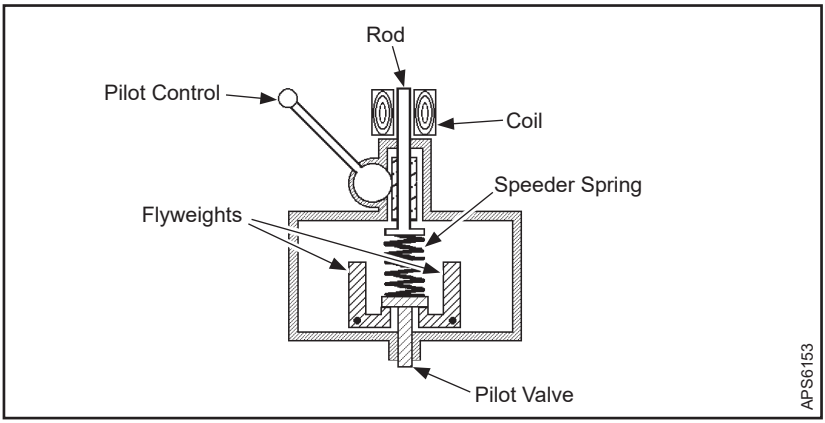

Synchronizer/Synchrophaser Governor
Figure 2-14

B. Governor Model Designation

(1) Hartzell Propeller uses a model number designation system to identify specific governor models.

(2) The governor model number is stamped on the base and/or body of the governor assembly.

(3) Refer to Table 2-3 for a description of the characters used in the governor model number.

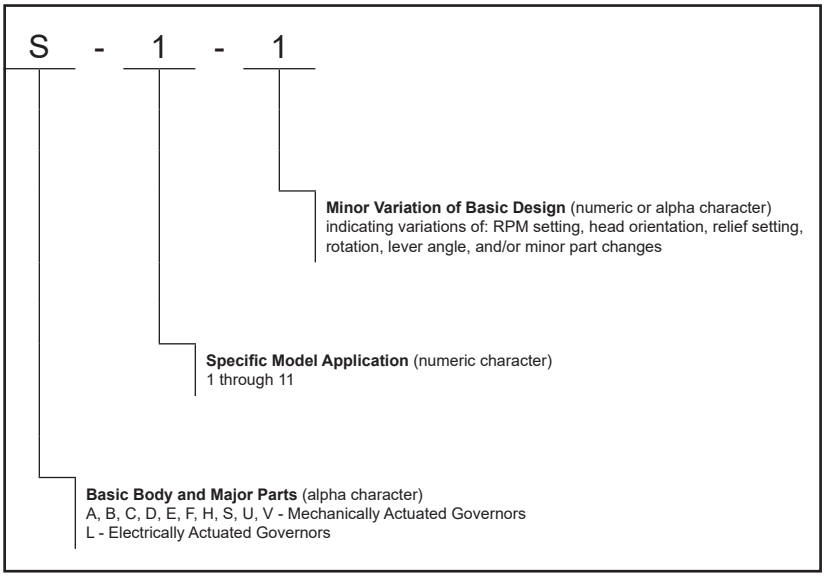

Governor Model Designations
Table 2-3

4. Propeller Ice Protection Systems (Rev. 1)
   A. System Description
      (1) For detailed descriptions of propeller ice protection systems, refer to the Anti-ice and De-ice Systems chapter in this manual.

(Blank Page)

INSTALLATION AND REMOVAL - CONTENTS

INSTALLATION AND REMOVAL - CONTENTS, CONTINUED

LIST OF FIGURES

LIST OF FIGURES, CONTINUED

LIST OF TABLES

(Blank Page)

1. Tools, Consumables, and Expendables

   The following tools, consumables, and expendables will be required for propeller removal or installation:

   A. Tooling

      Each propeller model requires a calibrated torque wrench, safety wire pliers (alternate: safety cable tool), and the model specific tooling listed below:

      HC-B3( )(A,N,P)-2( )

      - Torque wrench adapter TE5
      - 5/8 inch deep well socket
      - 1-7/16 inch crowfoot wrench

      HC-B(3,4,5)( )(A,N,P)-3( )

      - Torque wrench adapter TE5
      - 5/8 inch deep well socket
      - 1-7/16 inch crowfoot wrench
      - Feeler gage
      - Beta ring puller TE100

      HC-B(3,4)( )W-3( )

      - Torque wrench adapter TE432
      - Torque check tool TE404-1
      - Feeler gage
      - Beta ring puller TE100
      - 5/8 inch deep well socket
      - 1-7/16 inch crowfoot wrench

      HC-B5M( )-2 or HC-B(3,4,5)( )-5( )

      - Torque wrench adapter TE5
      - One inch deep well socket
      - 1-13/16 inch crowfoot wrench

      HC-( )3( )F-7( )

      - Torque wrench adapter TE152
      - 5/8 inch deep well socket
      - 1-7/16 inch crowfoot wrench

B. Consumables
- Quick Dry Stoddard Solvent or Methyl-Ethyl-Ketone (MEK)
- Anti-Seize Compound (MIL-PRF-83483)

C. Expendables
- 0.032 inch (0.81 mm) Stainless Steel Aircraft Safety Wire (Alternate: 0.032 inch [0.81 mm] aircraft safety cable and associated hardware)

2. Pre-Installation (Rev. 4)

A. Inspection of Shipping Package

(1) Examine the exterior of the shipping container, especially the box ends around each blade, for signs of shipping damage.

(a) If the box is damaged, contact the freight company for a freight claim.

(b) A hole, or tear, or crushed appearance at the end of the box (blade tips) may indicate that the propeller was dropped during shipment, possibly damaging the blades.

1 If the propeller is damaged, contact Hartzell Propeller. Refer to the section, "Hartzell Propeller Contact Information" in the Introduction chapter of this manual.

B. Uncrating

(1) Put the propeller on a firm support.

(2) Remove the banding and any external wood bracing from the cardboard shipping container.

(3) Remove the cardboard from the hub and blades.

CAUTION: DO NOT STAND THE PROPELLER ON A BLADE TIP.

(4) Put the propeller on a padded surface that supports the entire length of the propeller.

(5) Remove the plastic dust cover cup from the propeller mounting flange, if installed.

C. Inspection after Shipment

CAUTION: ON STEEL HUB TURBINE PROPELLERS, THE PISTON NUT (A-880-1 OR A-880-2) MAY BE REMOVED TO ALLOW THE BLADES TO ROTATE BEFORE PACKAGING.

NOTE: The ability to rotate the blades during propeller installation will make it easier to access the propeller mounting bolts on -3 propeller models.

(1) After removing the propeller from the shipping container, examine the propeller components for shipping damage.

D. Reassembly of a Propeller Disassembled for Shipment

(1) If a propeller was received disassembled for shipment, it must be reassembled by trained personnel in accordance with the applicable propeller maintenance manual.

(2) For installation of ice protection systems manufactured by Hartzell, refer to Hartzell Propeller Ice Protection System Manual 180 (30-61-80).

(3) For installation of ice protection systems not manufactured by Hartzell, refer to the applicable TC or STC holder's Instructions for Continued Airworthiness (ICA).

3. Propeller Mounting Hardware and Torque Information (Rev. 1)
   A. Propeller Mounting Hardware
      (1) Refer to Table 3-1 for part numbers of the propeller mounting hardware and O-rings.
   B. Torque Information
      (1) The structural integrity of joints in the propeller that are held together with threaded fasteners is dependent upon proper torque application.
         (a) Vibration can cause an incorrectly tightened fastener to fail in a matter of minutes.
         (b) Correct tension in a fastener depends on a variety of known load factors and can influence fastener service life.
         (c) Correct tension is achieved by application of measured torque.
      (2) Use accurate wrenches and professional procedures to make sure of correct tensioning.
      (3) Refer to Table 3-2 for the torque values to use when installing a Hartzell propeller.
      (4) When an adapter is used with a torque wrench, use the equation in Figure 3-1 to determine the correct torque value.
      (5) Refer to Figure 3-2 for the proper torquing sequence of the propeller mounting bolts/nuts.

Flange O-ring	Part Number
A-flange	C-3317-239-2
F-flange	C-3317-228
N/P-flange	C-3317-230

Propeller Model	Mounting Hardware
HC-B3TF-7( )	A-1328-1 Bolt and A-1381 Washer
HC-B3( )N-( )	B-3339 Bolt and A-2048-2 Washer
HC-B4( )( )-( )	B-3339 Bolt and A-2048-2 Washer
HC-B5MA-( )	B-3347 Bolt and A-2048-2 Washer
HC-B5MP-3( )	B-3339 Bolt and A-2048-2 Washer
HC-B5MP-5( )	B-3339-1 Bolt and A-2048-2 Washer

Propeller Mounting Hardware
Table 3-1

CAUTION 1: FOR A PROPELLER THAT DOES NOT USE A LUBRICATED (WET) TORQUE, THE MOUNTING HARDWARE MUST BE CLEAN AND DRY TO PREVENT EXCESSIVE PRELOAD OF THE MOUNTING FLANGE.

CAUTION 2: TORQUE VALUES WITH "WET" NOTED AFTER THEM ARE BASED ON LUBRICATED THREADS WITH APPROVED ANTI-SEIZE COMPOUND MIL-PRF-83483( ).

CAUTION 3: REFER TO FIGURE 3-1 FOR TORQUE READING WHEN USING A TORQUE WRENCH ADAPTER.

Hardware	Torque
A-flange mounting bolts	100-105 Ft-Lbs (136-142 N•m) wet
F-flange mounting bolts	80-90 Ft-Lbs (108-122 N•m)
N/P-flange mounting bolts	100-105 Ft-Lbs (136-142 N•m) wet
W-flange mounting nuts	120-125 Ft-Lbs (163-170 N•m)
W-flange mounting stud	35 ft-lbs (47.6 N•m)
Spinner mounting bolts	30-40 Ft-Lbs (41-54 N•m)
Piston nut (lock nut)	120 Ft-Lbs (163 N•m)*
Guide rod jam nuts	10 Ft-Lbs (14 N•m)*
Check Nut (beta valve assembly)	9-11 Ft-Lbs (12-15 N•m)
* Torque tolerance is ±10% unless otherwise noted.	

Torque Table
Table 3-2

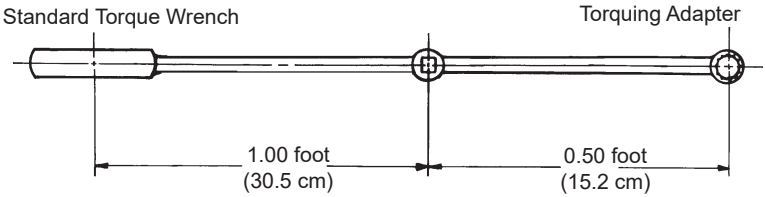

$$\frac{\text{(actual torque required) X (torque wrench length)}}{\text{(torque wrench length) + (length of adapter)}} = \text{Torque wrench reading to achieve required actual torque}$$

EXAMPLE:

$$\frac{\textbf{100 Ft-Lb (136 N•m) x 1 ft (308.4 mm)}}{\textbf{1 ft (308.4 mm) + 0.75 ft (228.6 mm)}} = \text{57.1 Ft-Lb (77.4 N•m)} < \text{reading on torque wrench with 9-inch (228.6 mm) adapter for actual torque of 100 Ft-Lb (136 N•m)}$$

The correction shown is for an adapter that is aligned with the centerline of the torque wrench. If the adapter is angled 90 degrees relative to the torque wrench centerline, the torque wrench reading and actual torque applied will be equal.

APS0212A

Calculating Torque When Using a Torque Wrench Adapter
Figure 3-1

W10107C
W10107B
W10108C
W10109C
W10109B

A-flange

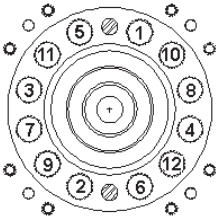

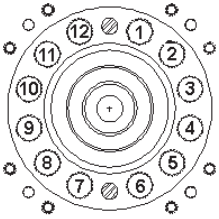

SEQUENCE A

Use Sequence A for steps one and two.

Step 1 - Torque all bolts to 40 ft-lbs (54 N•m).
Step 2 - Torque all bolts to 80 ft-lbs (108 N•m).

SEQUENCE B

Use Sequence B for step three.

Step 3 - Torque all bolts to Table 3-2.

F-flange

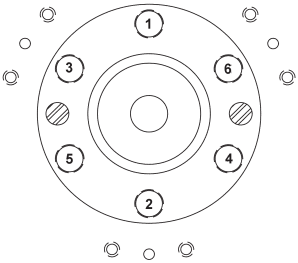

Step 1 -Torque all bolts to 40 ft-lbs (54 N•m).
Step 2 -Torque all bolts to Table 3-2.

N, P, or W-flange

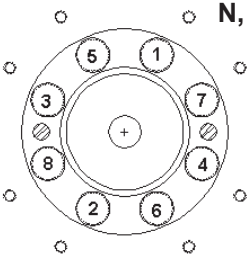

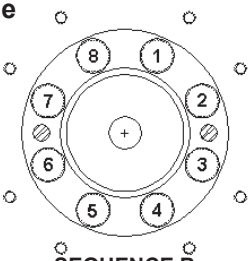

SEQUENCE A

Use Sequence A for steps one and two.

Step 1 - Torque all bolts to 40 ft-lbs (54 N•m).
Step 2 - Torque all bolts to 80 ft-lbs (108 N•m).

SEQUENCE B

Use Sequence B for step three.

Step 3 - Torque all bolts to Table 3-2.

Torquing Sequence for Propeller Mounting Bolts/Nuts
Figure 3-2

WARNING 1: DURING ENGINE INSTALLATION OR REMOVAL, USING THE PROPELLER TO SUPPORT THE WEIGHT OF THE ENGINE IS NOT AUTHORIZED. UNAPPROVED INSTALLATION AND REMOVAL TECHNIQUES MAY CAUSE DAMAGE TO THE PROPELLER THAT MAY LEAD TO FAILURE RESULTING IN AN AIRCRAFT ACCIDENT.

WARNING 2: WHEN INSTALLING THE PROPELLER, FOLLOW THE AIRFRAME MANUFACTURER'S MANUALS AND PROCEDURES, AS THEY MAY CONTAIN ISSUES VITAL TO AIRCRAFT SAFETY THAT ARE NOT CONTAINED IN THIS OWNER'S MANUAL.

CAUTION 1: INSTRUCTIONS AND PROCEDURES IN THIS SECTION MAY INVOLVE CRITICAL PARTS. REFER TO THE INTRODUCTION CHAPTER OF THIS MANUAL FOR INFORMATION ABOUT PROPELLER CRITICAL PARTS. REFER TO THE ILLUSTRATED PARTS LIST CHAPTER OF THE APPLICABLE OVERHAUL MANUAL(S) FOR THE IDENTIFICATION OF SPECIFIC PROPELLER CRITICAL PARTS.

CAUTION 2: AVOID THE USE OF BLADE PADDLES. DO NOT PLACE THE BLADE PADDLE IN THE AREA OF THE DE-ICE BOOT WHEN APPLYING TORQUE TO A BLADE ASSEMBLY. PLACE THE BLADE PADDLE IN THE THICKEST AREA OF THE BLADE, JUST OUTSIDE OF THE DE-ICE BOOT. USE ONE BLADE PADDLE PER BLADE.

4. Propeller Installation

   A. Precautions

      (1) Be sure the propeller is removed before the engine is removed or installed in the airframe.

(2) Follow the airframe manufacturer's instructions for installing the propeller. If such instructions are not in the airframe manufacturer's manual, then follow the instructions in this manual; however, mechanics must consider that this owner's manual does not describe important procedures that are outside the scope of this manual. In addition to propeller installation procedures, items such as rigging and preflight testing of flight idle blade angle, installation and adjustment of de-ice equipment, and propeller synchronization devices are normally found in the airframe manufacturer's manuals.

B. Installing HC-B(3, 5)( )( )-2( ) Propeller on the Aircraft Engine

WARNING: MAKE SURE THE SLING IS RATED UP TO 800 LBS (363 KG) TO SUPPORT THE WEIGHT OF THE PROPELLER ASSEMBLY DURING REMOVAL.

CAUTION: WHEN INSTALLING THE PROPELLER ON THE AIRCRAFT, DO NOT DAMAGE THE ICE PROTECTION SYSTEM COMPONENTS, IF APPLICABLE.

(1) With a suitable crane hoist and sling, carefully move the propeller assembly to the aircraft engine mounting flange.

(2) Make sure the propeller hub flange and engine flange mating surfaces are clean.

(3) Install the specified O-ring on the engine flange. Refer to Table 3-1.

(4) Align mounting and dowel pin holes in the propeller hub flange with the mounting holes and dowel pins in the engine flange.

CAUTION: MAKE SURE THAT COMPLETE AND TRUE SURFACE CONTACT IS ESTABLISHED BETWEEN THE PROPELLER HUB FLANGE AND THE ENGINE FLANGE.

(5) Slide the propeller flange onto the engine flange.

CAUTION: NEW PROPELLER MOUNTING BOLTS MUST BE USED WHEN INITIALLY INSTALLING A NEW OR OVERHAULED PROPELLER.

(6) Apply MIL-PRF-83483 anti-seize compound to the threaded surfaces of the specified mounting bolts. Refer to Table 3-1 for appropriate mounting hardware.

(a) If the propeller is removed between overhaul intervals, mounting bolts and washers may be reused if they are not damaged or corroded.

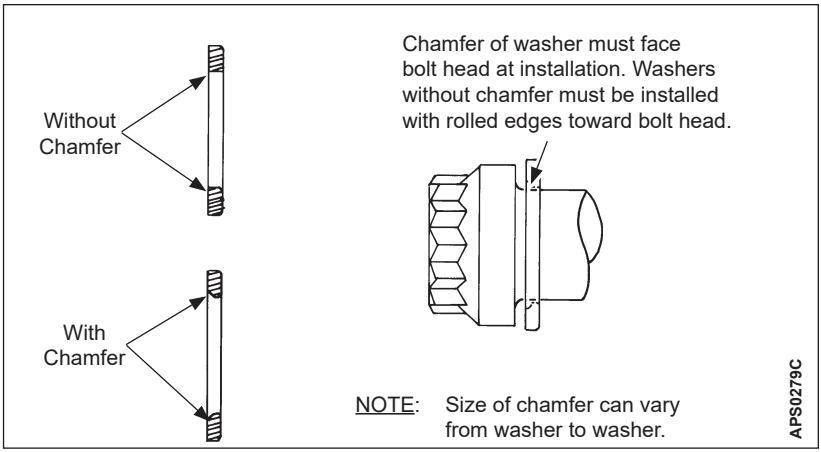

Mounting Bolt and Washer
Figure 3-3

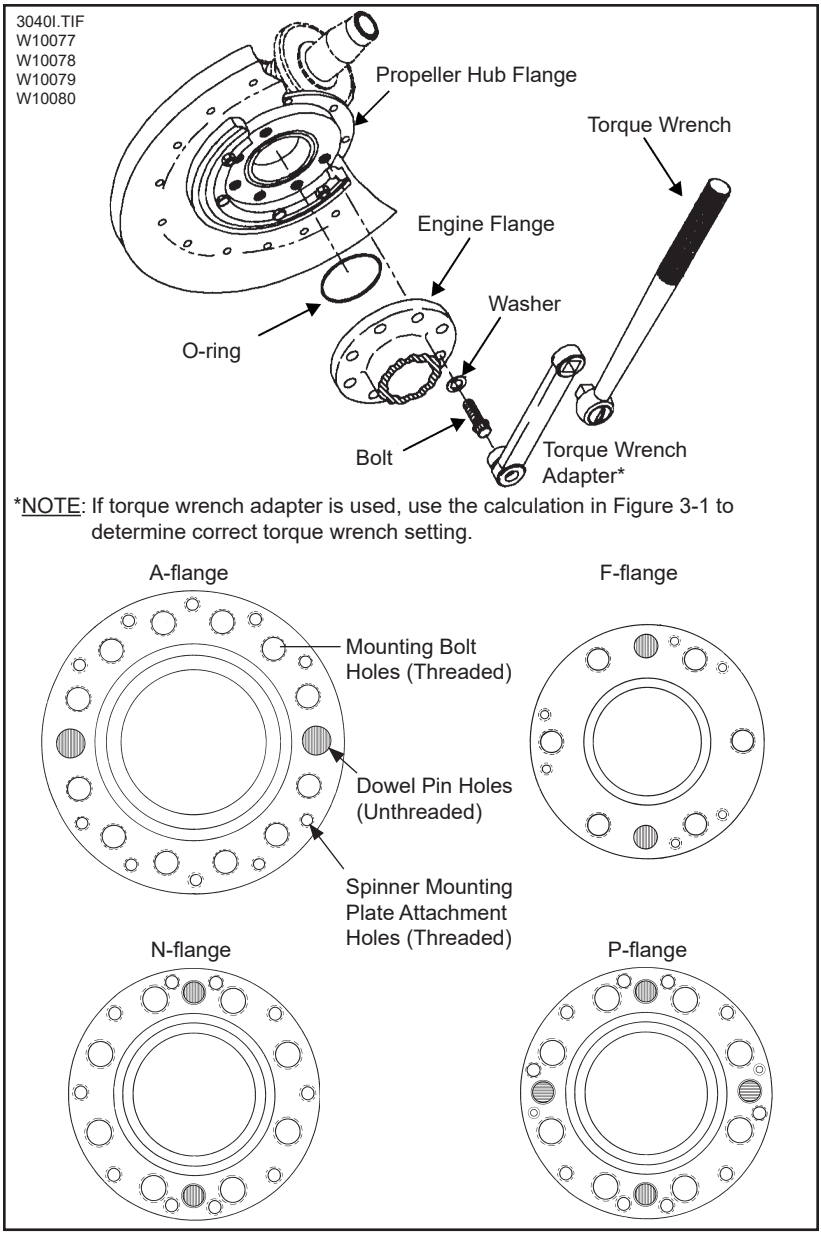

Installing Propeller on Engine Flange
Figure 3-4

(7) Install the mounting bolts with washers through the engine flange and into the propeller hub flange. Refer to Figure 3-4.

NOTE: For proper orientation of the washer during installation, refer to Figure 3-3.

(8) Use a torque wrench and torque wrench adapter TE5 to torque all mounting bolts in sequences and steps shown in Figure 3-2. Refer to Table 3-2 and Figure 3-1 to determine the proper torque value.

(9) Safety all mounting bolts with 0.032 inch (0.81 mm) minimum diameter stainless steel wire or equivalent aircraft safety cable and associated hardware (two bolts per safety).

CAUTION: TO FACILITATE BOXING AND SHIPPING OF PROPELLERS, THE PISTON NUT (A-880-1) ON HC-B3( )( )-2( ) STEEL HUB TURBINE PROPELLERS MAY HAVE BEEN REMOVED TO ALLOW ROTATING OF THE BLADES BEFORE PACKAGING.

(10) Procedure for reinstallation of piston nut, if applicable.

(a) Following the installation of the propeller, use a breaker bar and a 5/8 inch deep well socket to hold the pitch change rod.

(b) Using a crowfoot wrench and torque wrench, torque the A-880-( ) piston nut. Refer to Table 3-2 and Figure 3-1 for the proper torque value.

NOTE: The removal and subsequent reinstallation of the piston nut does not require that the propeller blade angles be re-checked.

(11) If the propeller is equipped with an ice protection system that uses components supplied by Hartzell Propeller, refer to Hartzell Propeller Ice Protection System Manual 180 (30-61-80) for applicable instructions and technical information.

(12) Propeller ice protection system components not supplied by Hartzell Propeller, refer to the applicable TC or STC holder's Instructions for Continued Airworthiness (ICA).

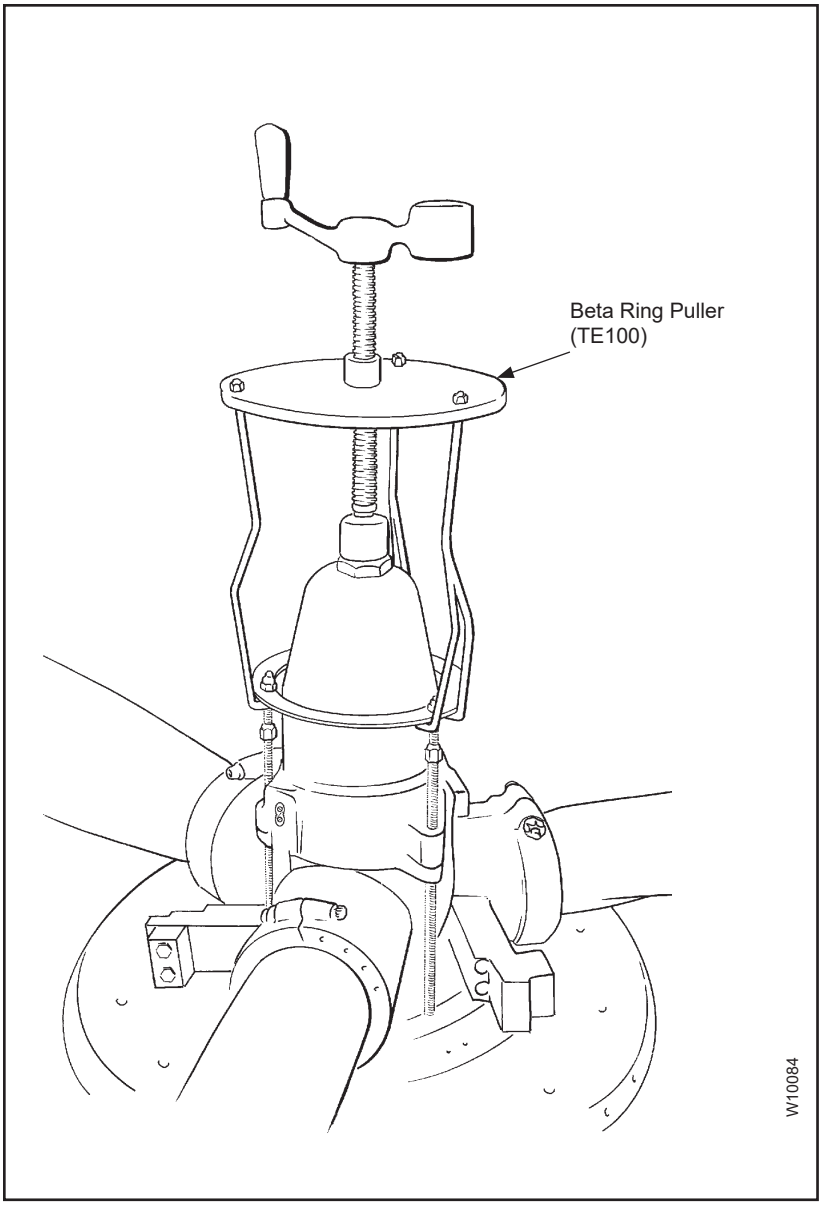

Beta Ring Puller
Figure 3-5

C. Installing HC-B(3,4,5)( )(A,N,P)-3( ) Propeller on the Aircraft Engine

NOTE: The use of a fretting disk between the propeller flange and engine flange is recommended on certain applications for propeller models HC-B5MP-3( ). Refer to Hartzell Propeller Service Bulletin HC-SB-61-275 information about affected applications.

(1) Use a beta ring puller TE100 (Figure 3-5) to compress the beta system and pull the beta ring forward to allow installation of the double hex head propeller mounting bolts.

WARNING: MAKE SURE THE SLING IS RATED UP TO 800 LBS (363 KG) TO SUPPORT THE WEIGHT OF THE PROPELLER ASSEMBLY DURING INSTALLATION.

CAUTION: WHEN INSTALLING THE PROPELLER ON THE AIRCRAFT, DO NOT DAMAGE THE ICE PROTECTION SYSTEM COMPONENTS, IF APPLICABLE.

(2) With a suitable crane hoist and sling, carefully move the propeller assembly to the aircraft engine mounting flange.

(3) Make sure the propeller hub flange and the engine flange mating surfaces are clean.

(4) Install the specified O-ring on the engine flange. Refer to Table 3-1.

(5) Align the mounting and dowel pin holes in the propeller hub flange with the mounting holes and dowel pins in the engine flange.

CAUTION: MAKE SURE THAT COMPLETE AND TRUE SURFACE CONTACT IS ESTABLISHED BETWEEN THE PROPELLER HUB FLANGE AND THE ENGINE FLANGE.

(6) Slide the propeller flange onto the engine flange.

CAUTION: NEW PROPELLER MOUNTING BOLTS MUST BE USED WHEN INITIALLY INSTALLING A NEW OR OVERHAULED PROPELLER.

(7) Apply MIL-PRF-83483 anti-seize compound to the threaded surfaces of the specified mounting bolts. Refer to Table 3-1 for appropriate mounting hardware.

NOTE: If the propeller is removed between overhaul intervals, mounting bolts and washers may be reused if they are not damaged or corroded.

CAUTION: ID CHAMFER OF THE WASHER MUST BE FACING TOWARD THE BOLT HEAD. WASHERS WITHOUT CHAMFER MUST BE INSTALLED WITH ROLLED EDGES TOWARD THE BOLT HEAD. (REFER TO FIGURE 3-3).

(8) Install mounting bolts with washers through the engine flange and into the propeller hub flange. Refer to Figure 3-4.

(9) Use a torque wrench and torque wrench adapter TE5 to torque all mounting bolts in sequences and steps shown in Figure 3-2. Refer to Table 3-2 and Figure 3-1 to determine the proper torque value.

(10) Safety all mounting bolts with 0.032 inch (0.81 mm) minimum diameter stainless steel wire or equivalent aircraft safety cable and associated hardware (two bolts per safety).

(11) Decompress the external beta system and remove the beta ring puller TE100.

CAUTION: THE BETA RING MUST NOT CONTACT ANY ENGINE COMPONENT OR MOUNTING BOLT SAFETY WIRE. THE BETA SYSTEM COULD BE DAMAGED IF IT CONTACTS ANY STATIC ENGINE COMPONENT WHILE ROTATING.

(12) Examine the beta ring to make sure that it is not in contact with any engine component or mounting bolt safety wire.

(a) If there is contact between the beta ring and any engine component or mounting bolt safety wire, consult qualified personnel at an appropriately licensed propeller repair facility.

(13) Install the carbon block into the beta linkage lever in accordance with the airframe manufacturer's instructions.

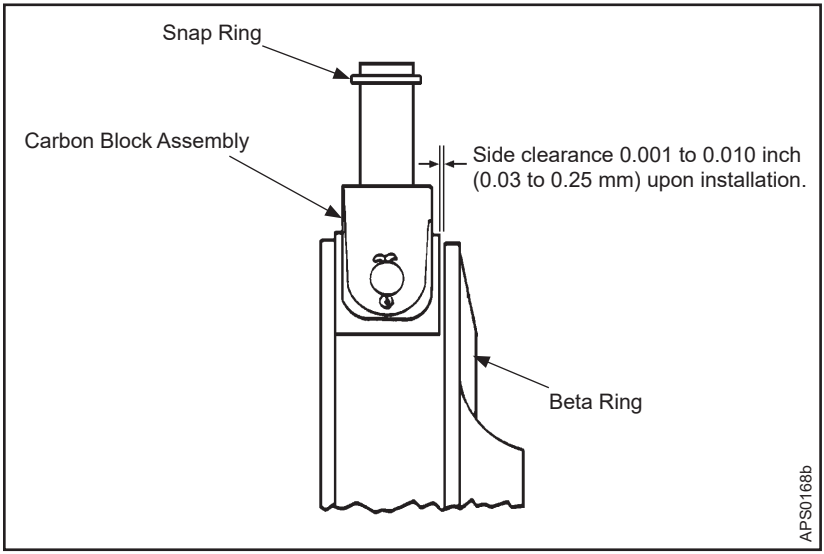

Carbon Block and Beta Ring Clearance
Figure 3-6

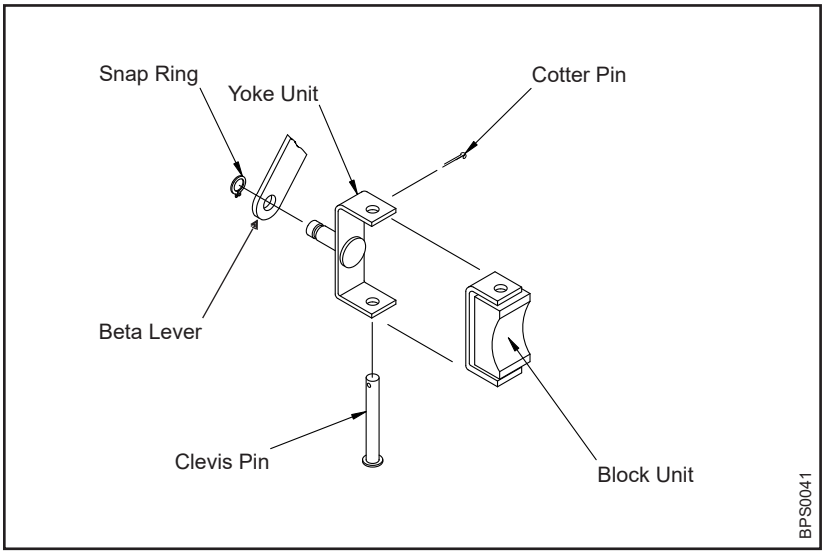

Carbon Block Assembly
Figure 3-7

CAUTION 1: FIT THE BLOCK IN THE BETA RING WITH A MINIMUM SIDE CLEARANCE OF 0.001 INCH (0.03 mm). REFER TO FIGURE 3-6.

CAUTION 2: MAXIMUM SIDE CLEARANCE PERMITTED IS 0.010 INCH (0.25 mm) IN ACCORDANCE WITH THE CARBON BLOCK ASSEMBLIES SECTION IN THE MAINTENANCE PRACTICES CHAPTER OF THIS MANUAL.

(14) Install the carbon block assembly into the beta ring. Refer to Figure 3-7

(15) Install, adjust and safety the beta linkage per the airframe manufacturer's instructions.

CAUTION: TO FACILITATE BOXING AND SHIPPING OF PROPELLERS, THE PISTON NUT MAY HAVE BEEN REMOVED TO ALLOW ROTATING OF THE BLADES BEFORE PACKAGING.

(16) Procedure for reinstallation of piston nut, if applicable.

(a) Following the installation of the propeller, use a breaker bar and a 5/8 inch deep well socket to hold the pitch change rod.

(b) Using a crowfoot wrench and torque wrench, torque the A-880-( ) piston nut. Refer to Table 3-2 and Figure 3-1 for the proper torque value.

NOTE: The removal and subsequent reinstallation of the piston nut does not require that the propeller blade angles be re-checked.

(17) If the propeller is equipped with an ice protection system that uses components supplied by Hartzell Propeller, refer to Hartzell Propeller Ice Protection System Manual 180 (30-61-80) for applicable instructions and technical information.

(18) Propeller ice protection system components not supplied by Hartzell Propeller, refer to the applicable TC or STC holder's Instructions for Continued Airworthiness (ICA).

D. Installing HC-B(3,4)( )W-3( ) Propeller on the Aircraft Engine

CAUTION: WHEN INSTALLING THE HC-B4TW-3/T10282N PROPELLER ON THRUSH AIRCRAFT MODELS S2R-H80 OR S2RHG-H80, COMPLIANCE WITH THE LATEST REVISION OF GE AVIATION SERVICE BULLETIN H80-100-72-00019 IS REQUIRED.

(1) Use a beta ring puller TE100 (Figure 3-5) to compress the beta system and pull the beta ring forward to allow access to the propeller mounting flange.

WARNING: MAKE SURE THE SLING IS RATED UP TO 800 LBS (363 KG) TO SUPPORT THE WEIGHT OF THE PROPELLER ASSEMBLY DURING INSTALLATION.

CAUTION: WHEN INSTALLING THE PROPELLER ON THE AIRCRAFT, DO NOT DAMAGE THE ICE PROTECTION SYSTEM COMPONENTS, IF APPLICABLE.

(2) With a suitable crane hoist and sling, carefully move the propeller assembly to the aircraft engine mounting flange.

CAUTION: IF THE PROPELLER IS REMOVED BETWEEN OVERHAUL INTERVALS, A TORQUE CHECK OF THE MOUNTING STUDS MUST BE PERFORMED.

(3) Unless this is the first installation of a new, or newly overhauled propeller, perform a torque check of the propeller mounting studs as follows:

(a) Thread the torque check tool TE404-1 onto each propeller mounting stud and torque in accordance with Table 3-2, "Torque Table".

(b) Remove the torque check tool TE404-1 and visually inspecting each stud for evidence of movement.

(c) If any stud rotates due to either the tightening or removal of the torque check tool, all studs must be replaced. Refer to Hartzell Propeller Standard Practices Manual 202A (61-01-02) for stud replacement procedures.

(4) Make sure the propeller hub flange and the engine flange mating surfaces are clean.

(5) Install the C-3317-230 O-ring on the engine flange.

(6) If the C-7364-2 spacer is installed on the propeller hub with screws, proceed to step (8) of this procedure.

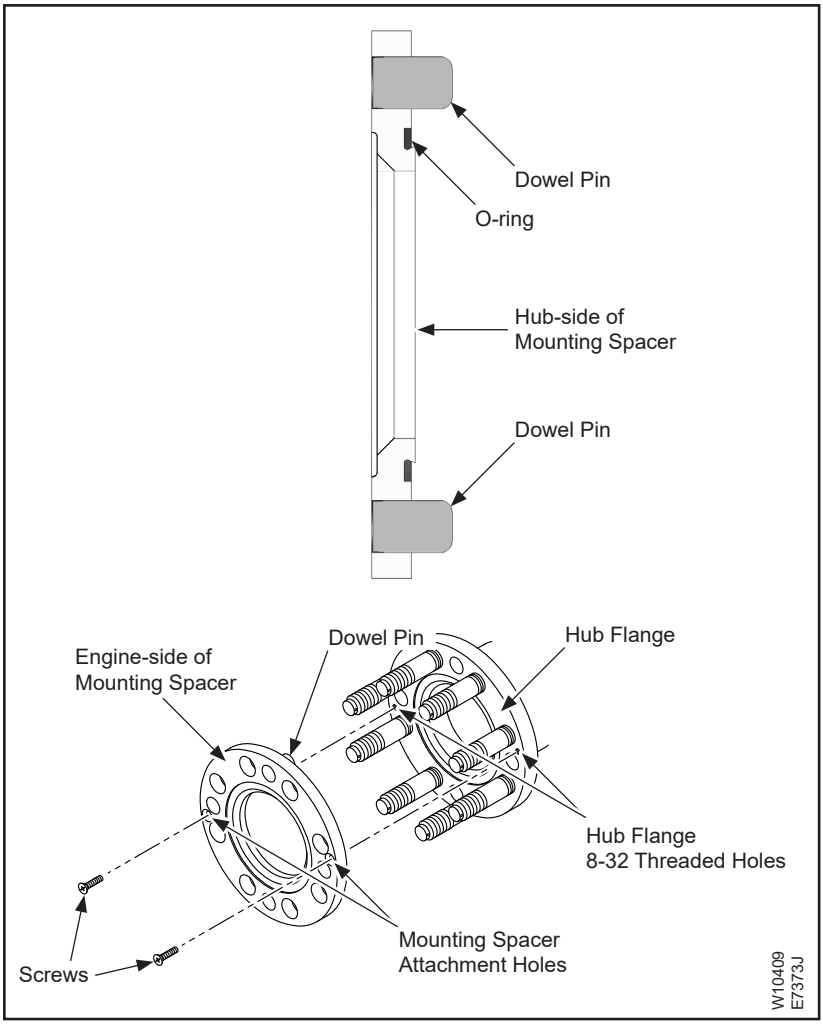

Installing the Mounting Spacer onto the Hub Flange
Figure 3-8

(7) If the C-7364-2 mounting spacer is not already installed on the propeller hub, perform the following installation procedures:

(a) If the hub flange does not have two 8-32 threaded holes to attach the mounting spacer or if two attachment screws were not provided, perform the following steps:

1 Coat the C-3317-233 O-ring with grease.

2 Install the O-ring in the mounting ring O-ring groove that interfaces with the hub flange. Refer to Figure 3-8.

3 Align the propeller hub mounting studs, dowel pin holes, and 8-32 threaded holes with the mounting spacer mounting holes, dowel pins, and mounting spacer attachment holes.

CAUTION: MAKE SURE THE C-3317-233 O-RING STAYS IN THE MOUNTING SPACER O-RING GROOVE. IF THE O-RING IS TWISTED OR PINCHED, OIL LEAKAGE WILL RESULT WHEN THE PROPELLER IS OPERATED ON THE AIRCRAFT.

4 Once aligned, install the mounting spacer onto the hub flange.

NOTE: If the propeller installation will be delayed, the spacer and O-ring should be installed and temporarily held in place with non-self locking nuts and a sufficient number of washers on at least two mounting studs. Remove the nuts and washers before installation.

(b) If the hub flange has two 8-32 threaded holes and two B-3868-S52 screws are provided to attach the C-7364-2 mounting spacer, perform the following steps:

1 Coat the C-3317-233 O-ring with grease.

2 Install O-ring in the mounting spacer O-ring groove that interfaces with the hub flange. Refer to Figure 3-8.

3 Align the mounting spacer attachment holes with the two 8-32 threaded holes in the hub flange.

CAUTION: MAKE SURE THE C-3317-233 O-RING STAYS IN THE MOUNTING SPACER O-RING GROOVE. IF THE O-RING IS TWISTED OR PINCHED, OIL LEAKAGE WILL RESULT WHEN THE PROPELLER IS OPERATED ON THE AIRCRAFT.

4 Slide the mounting spacer onto the mounting studs and against the hub flange.

5 Insert a B-3868-S52 screw through each screw hole in the spacer and into the 8-32 threaded holes in the hub flange. Refer to Figure 3-8.

CAUTION: MAKE SURE THE FLAT-HEAD ATTACHMENT SCREWS DO NOT PROTRUDE ABOVE THE ENGINE-SIDE SURFACE OF THE SPACER.

6 Tighten the screws until snug.

7 If after the B-3868-S52 screws are tightened, one or both protrude above the engine side surface of the spacer, perform the following steps:

a Remove both flat-head screws and the spacer.

b Rotate the spacer 180 degrees, aligning the screw holes in the spacer with the 8-32 threaded holes in the hub flange.

CAUTION: MAKE SURE THE B-3868-S52 SCREWS DO NOT PROTRUDE ABOVE THE ENGINE-SIDE SURFACE OF THE SPACER.

c Slide the spacer onto the mounting studs and against the hub flange.

d Insert a B-3868-S52 screw through each screw hole in the spacer and into the 8-32 threaded holes in the hub flange. Refer to Figure 3-8.

e Tighten the screws until snug.

f If after the B-3868-S52 screws are tightened, one or both protrude above the engine side surface of the spacer, remove the screws.

NOTE: If the propeller installation will be delayed, the spacer and O-ring should be installed and temporarily held in place with non-self locking nuts and a sufficient number of washers on at least two mounting studs. Remove the nuts and washers before installation.

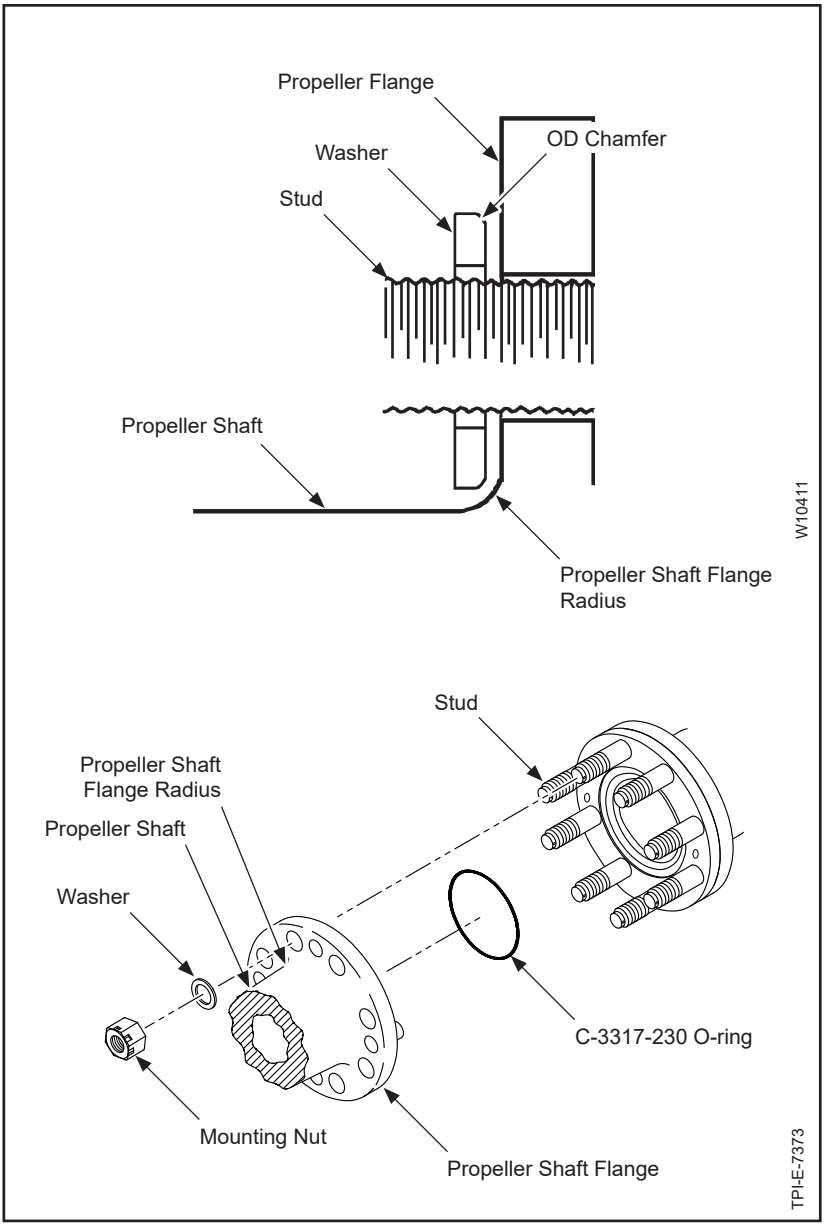

Installing the Propeller onto the Propeller Flange
Figure 3-9

VIDEO

CAUTION 1: DO NOT LET THE TORQUE WRENCH ADAPTER TE432 CONTACT THE ADJACENT NUTS OR THE PROPELLER SHAFT FLANGE RADIUS WHEN LOOSENING OR TIGHTENING THE MOUNTING NUTS.

CAUTION 2: IF THE TORQUE WRENCH ADAPTER TE432 IS CHAMFERED, MAKE SURE THE CHAMFER-SIDE IS TOWARD THE ENGINE FLANGE.

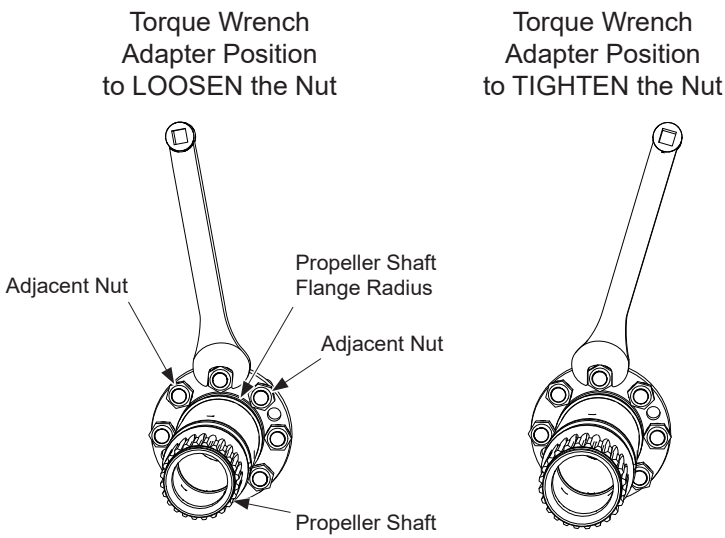

Torque Wrench Adapter Position for W-flange Propellers
Figure 3-10

CAUTION 1: IF THE C-7364-2 SPACER IS NOT ATTACHED TO THE HUB, MAKE SURE THE HUB-TO-SPACER O-RING STAYS IN THE GROOVE IN THE SPACER. IF THE O-RING IS TWISTED OR PINCHED, OIL LEAKAGE WILL RESULT WHEN THE PROPELLER IS OPERATED ON THE AIRCRAFT.

CAUTION 2: MAKE SURE THAT COMPLETE AND TRUE SURFACE CONTACT IS ESTABLISHED BETWEEN THE SPACER AND THE ENGINE FLANGE.

(8) Slide the propeller onto the propeller flange.

CAUTION: THE SIDE OF THE WASHER WITH THE OD CHAMFER MUST BE AGAINST THE ENGINE FLANGE.

(9) Install the 109514 washers onto the propeller mounting studs. Refer to Figure 3-9.

NOTE: The OD chamfer on the washer is for clearance of the engine flange fillet.

CAUTION: NEW MOUNTING NUTS MUST BE USED WHEN INITIALLY INSTALLING A NEW OR OVERHAULED PROPELLER.

(10) Install the B-7458 self locking mounting nuts onto the propeller mounting studs. Refer to Figure 3-9.

NOTE: If the propeller is removed between overhaul intervals, mounting nuts may be reused if they are not damaged or corroded.

(11) Hand tighten the mounting nuts.

(12) Using a torque wrench and torque wrench adapter TE432, torque all mounting nuts. Refer to Figure 3-10.

(a) Torque the mounting nuts in the sequences and steps shown in Figure 3-2.

1 Refer to Table 3-2 and Figure 3-1 to determine the proper torque value.

(13) Safety all propeller mounting studs with 0.032 inch (0.81 mm) minimum diameter stainless steel wire or equivalent aircraft safety cable and associated hardware (two bolts per safety).

(14) Decompress the external beta system and remove the beta ring puller TE100.

CAUTION: THE BETA RING MUST NOT CONTACT ANY ENGINE COMPONENT OR MOUNTING BOLT SAFETY WIRE. THE BETA SYSTEM COULD BE DAMAGED IF IT CONTACTS ANY STATIC ENGINE COMPONENT WHILE ROTATING.

(15) Examine the beta ring to make sure that it is not in contact with any engine components or mounting bolt safety wire.

(a) If there is contact between the beta ring and any engine components or mounting bolt safety wire, consult qualified personnel at a certified propeller repair station with an appropriate rating.

(16) Install the carbon block into the beta linkage lever per the airframe manufacturer's instructions.

CAUTION 1: FIT THE BLOCK IN THE BETA RING WITH A SIDE CLEARANCE OF 0.001 INCH (0.03 mm). REFER TO FIGURE 3-6.

CAUTION 2: MAXIMUM SIDE CLEARANCE PERMITTED IS 0.010 INCH (0.25 mm) IN ACCORDANCE WITH THE CARBON BLOCK ASSEMBLIES SECTION IN THE MAINTENANCE PRACTICES CHAPTER OF THIS MANUAL.

(17) Install the carbon block assembly (Figure 3-7) into the beta ring.

(18) Install, adjust, and safety the beta linkage per the airframe manufacturer's instructions.

CAUTION: TO FACILITATE BOXING AND SHIPPING OF THE PROPELLER, THE PISTON NUT MAY HAVE BEEN REMOVED TO ALLOW ROTATING OF THE BLADES BEFORE PACKAGING.

(19) Procedure for reinstallation of the piston nut, if applicable.

(a) Following the installation of the propeller, use a breaker bar and a 5/8 inch deep well socket to hold the pitch change rod.

(b) Using a crowfoot wrench and torque wrench, torque the A-880-( ) piston nut. Refer to Table 3-2 and Figure 3-1 for the proper torque value.

NOTE: The removal and subsequent reinstallation of the piston nut does not require that the propeller blade angles be re-checked.

(20) If the propeller is equipped with an ice protection system that uses components supplied by Hartzell Propeller, refer to the Hartzell Propeller Ice Protection System Manual 180 (30-61-80) for applicable instructions and technical information.

(21) If the propeller is equipped with an ice protection system that does not use components supplied by Hartzell Propeller, refer to the applicable TC or STC holder's Instructions for Continued Airworthiness (ICA).

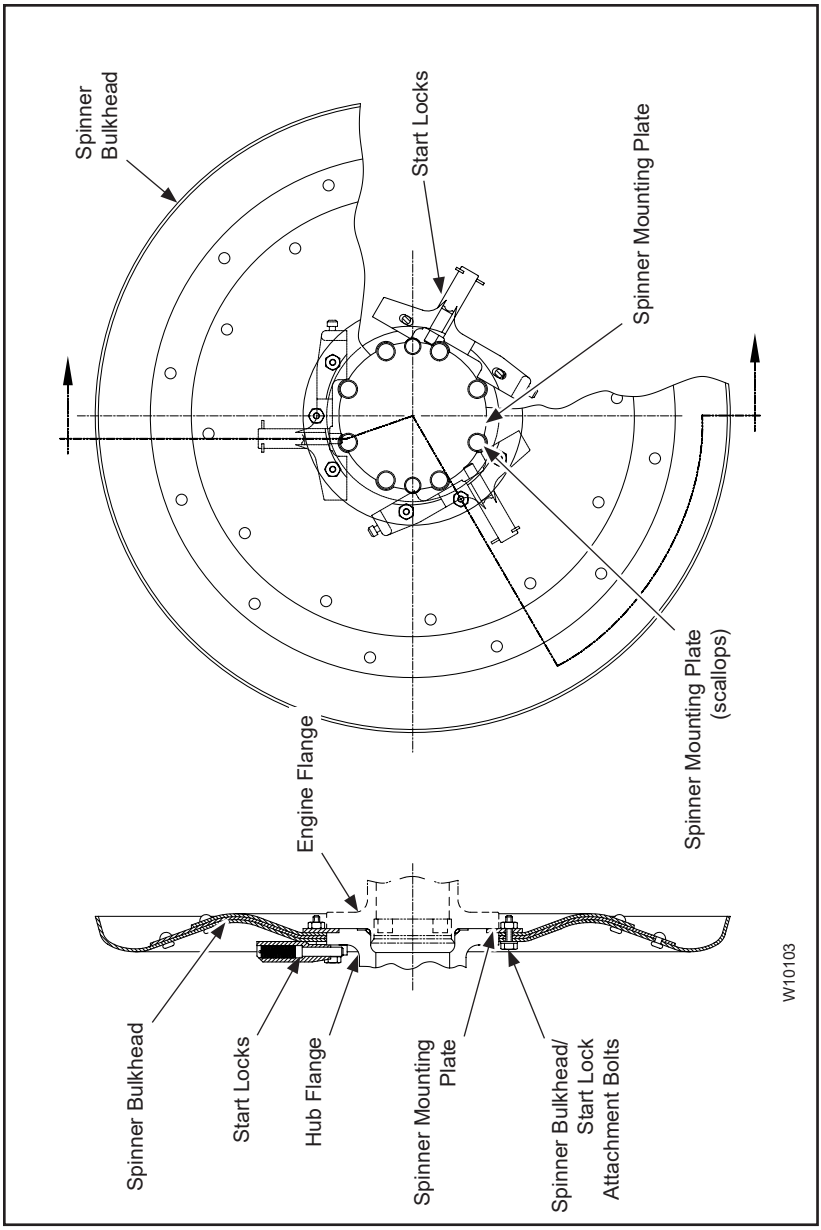

One-piece Spinner Mounting Plate Installation
Figure 3-11

E. Installing HC-B(3,4)( )( )-5( ) Propeller, with a One-piece Spinner Mounting Plate, on the Aircraft Engine

NOTE: Some -5 propellers were previously manufactured with a one-piece spinner mounting plate. The spinner bulkhead, which has start locks mounted on it, is attached to the spinner mounting plate. The spinner mounting plate is installed in a cutaway portion of the propeller hub flange and is "pinched" between the propeller hub flange and the engine flange. Refer to Figure 3-11.

WARNING: MAKE SURE THE SLING IS RATED UP TO 800 LBS (363 KG) TO SUPPORT THE WEIGHT OF THE PROPELLER ASSEMBLY DURING INSTALLATION.

CAUTION: WHEN INSTALLING THE PROPELLER ON THE AIRCRAFT, DO NOT DAMAGE THE ICE PROTECTION SYSTEM COMPONENTS, IF APPLICABLE.

(1) With a suitable crane hoist and sling, carefully move the propeller assembly to the aircraft engine mounting flange.

(2) Make sure the propeller hub flange and engine flange mating surfaces are clean.

(3) Install the specified O-ring on the engine flange. Refer to Table 3-1.

(4) Retract each start lock pin and hold into place with a heavy wire inserted into the hole in each auto high pitch housing.

(5) Slide the assembled one-piece spinner mounting plate, spinner bulkhead and start lock onto the propeller hub flange.

(a) The start locks must face toward the propeller.

(6) Align the clearance "scallops" in the spinner mounting plate with the holes in the propeller hub flange. Refer to Figure 3-11.

NOTE: This will insure that the spinner mounting plate does not interfere with the mounting bolts and dowel pins.

(7) Align the start locks with each blade and clamp mounted stop plate.

NOTE: The start locks are attached to the spinner bulkhead.

(8) Align mounting and dowel pin holes in the propeller hub flange with the mounting holes and dowel pins in the engine flange.

CAUTION: MAKE SURE THAT COMPLETE AND TRUE SURFACE CONTACT IS ESTABLISHED BETWEEN THE PROPELLER HUB FLANGE AND THE ENGINE FLANGE.

(9) Slide the propeller flange onto the engine flange.

CAUTION: NEW PROPELLER MOUNTING BOLTS MUST BE USED WHEN INITIALLY INSTALLING A NEW OR OVERHAULED PROPELLER.

(10) Apply MIL-PRF-83483 anti-seize compound to the threaded surfaces of the mounting bolts. Refer to Table 3-2 for appropriate mounting hardware.

NOTE: If the propeller is removed between overhaul intervals, mounting bolts and washers may be reused if they are not damaged or corroded.

CAUTION: ID CHAMFER OF THE WASHER MUST BE FACING TOWARD THE BOLT HEAD. WASHERS WITHOUT CHAMFER MUST BE INSTALLED WITH ROLLED EDGES TOWARD THE BOLT HEAD (FIGURE 3-3).

(11) Install the mounting bolts with washers through the engine flange and into the propeller hub flange. Refer to Figure 3-4.

(12) Use a torque wrench and torque wrench adapter TE5 to torque all mounting bolts in sequences and steps shown in Figure 3-2. Refer to Table 3-2 and Figure 3-1 to determine the proper torque value.

(13) Safety all mounting bolts with 0.032 inch (0.81 mm) minimum diameter stainless steel wire or equivalent aircraft safety cable and associated hardware (two bolts per safety.)

(14) Remove the heavy wire from the start lock housings to free the start lock pins.

(15) Refer to the airframe manufacturer's instructions to seat the start lock plates on the start locks.

NOTE: The start lock plates interface with the start lock pins and are attached to the inboard surface of each blade clamp.

CAUTION: TO FACILITATE BOXING AND SHIPPING OF PROPELLERS, THE PISTON NUT (A-880-2) ON -5 STEEL HUB TURBINE PROPELLERS MAY HAVE BEEN REMOVED TO ALLOW ROTATING OF THE BLADES BEFORE PACKAGING.

(16) Procedure for reinstallation of piston nut, if applicable.

(a) Following the installation of the propeller, use a breaker bar and a one inch deep well socket to hold the pitch change rod.

(b) Using a crowfoot wrench and torque wrench, torque the A-880-( ) piston nut. Refer to Table 3-2 and Figure 3-1 for the proper torque value.

NOTE: The removal and subsequent reinstallation of the piston nut does not require that the propeller blade angles be re-checked.

(17) Install the beta tube per airframe and/or engine manufacturer's instructions.

NOTE 1: Follow the airframe manufacturer's instructions for adjusting the beta tube to obtain the correct low pitch (flight idle blade angle).

NOTE 2: Refer to the Aircraft Type Certificate Data Sheet for the low pitch blade angle setting.

(18) If the propeller is equipped with an ice protection system that uses components supplied by Hartzell Propeller, refer to Hartzell Propeller Ice Protection System Manual 180 (30-61-80) for applicable instructions and technical information.

(19) Propeller ice protection system components not supplied by Hartzell Propeller, refer to the applicable TC or STC holder's Instructions for Continued Airworthiness (ICA).

F. Installing HC-B(3,4,5)( )( )-5( ) Propeller, with a Two-piece Spinner Mounting Plate, on the Aircraft Engine

NOTE: Some -5 propellers are manufactured with a two-piece spinner mounting plate which is bolted on the propeller hub flange. On four and five-blade propellers (Refer to Figure 2-7) the bulkhead and start locks are attached to the spinner mounting plate. On three-bladed propellers (Refer to Figure 2-6) the start locks are attached to the guide collar (between the hub and cylinder); although the bulkhead is attached to the spinner mounting plate.

WARNING: MAKE SURE THE SLING IS RATED UP TO 800 LBS (363 KG) TO SUPPORT THE WEIGHT OF THE PROPELLER ASSEMBLY DURING INSTALLATION.

CAUTION: WHEN INSTALLING THE PROPELLER ON THE AIRCRAFT, DO NOT DAMAGE THE ICE PROTECTION SYSTEM COMPONENTS, IF APPLICABLE.

(1) With a suitable crane hoist and sling, carefully move the propeller assembly to the aircraft engine mounting flange.

(a) If the propeller is equipped with a de-ice system, refer to the General Maintenance Practices section in the Introduction chapter of this manual.

(2) Make sure the propeller hub flange and engine flange mating surfaces are clean.

(3) Install the specified O-ring on the engine flange. Refer to Table 3-1.

(4) Align the mounting and dowel pin holes in the propeller hub flange with the mounting holes and dowel pins in the engine flange.

CAUTION: MAKE SURE THAT COMPLETE AND TRUE SURFACE CONTACT IS ESTABLISHED BETWEEN THE PROPELLER HUB FLANGE AND THE ENGINE FLANGE.

(5) Slide the propeller flange onto the engine flange.

CAUTION: NEW PROPELLER MOUNTING BOLTS MUST BE USED WHEN INITIALLY INSTALLING A NEW OR OVERHAULED PROPELLER.

(6) Apply MIL-PRF-83483 anti-seize compound to the threaded surfaces of the mounting bolts. Refer to Table 3-1 for appropriate mounting hardware.

NOTE: If the propeller is removed between overhaul intervals, mounting bolts and washers may be reused if they are not damaged or corroded.

CAUTION: ID CHAMFER OF THE WASHER MUST BE FACING TOWARD THE BOLT HEAD. WASHERS WITHOUT CHAMFER MUST BE INSTALLED WITH ROLLED EDGES TOWARD THE BOLT HEAD (FIGURE 3-3).

(7) Install the mounting bolts with washers through the engine flange and into the propeller hub flange. Refer to Figure 3-4.

(8) Use a torque wrench and torque wrench adapter TE5 to torque all mounting bolts in sequences and steps shown in Figure 3-2. Refer to Table 3-2 and Figure 3-1 to determine the proper torque value.

(9) Safety all mounting bolts with 0.032 inch (0.81 mm) minimum diameter stainless steel wire or equivalent aircraft safety cable and associated hardware (two bolts per safety).

CAUTION: TO FACILITATE BOXING AND SHIPPING OF PROPELLERS, THE PISTON NUT (A-880-2) ON -5 STEEL HUB TURBINE PROPELLERS MAY HAVE BEEN REMOVED TO ALLOW ROTATING OF THE BLADES BEFORE PACKAGING.

(10) Procedure for reinstallation of piston nut, if applicable.

(a) Following the installation of the propeller, use a breaker bar and a one inch deep well socket to hold the pitch change rod.

(b) Using a crowfoot wrench and torque wrench, torque the A-880-( ) piston nut. Refer to Table 3-2 and Figure 3-1 for the proper torque value.

NOTE: The removal and subsequent reinstallation of the piston nut does not require that the propeller blade angles be re-checked.

(11) Install the beta tube per airframe and/or engine manufacturer's instructions.

(a) Follow the airframe manufacturer's instructions for adjusting the beta tube to obtain the correct low pitch (flight idle blade angle).

(b) Refer to the Aircraft Type Certificate Data Sheet for the low pitch blade angle setting.

(12) If the propeller is equipped with an ice protection system that uses components supplied by Hartzell Propeller, refer to Hartzell Propeller Ice Protection System Manual 180 (30-61-80) for applicable instructions and technical information.

(13) Propeller ice protection system components not supplied by Hartzell Propeller, refer to the applicable TC or STC holder's Instructions for Continued Airworthiness (ICA).

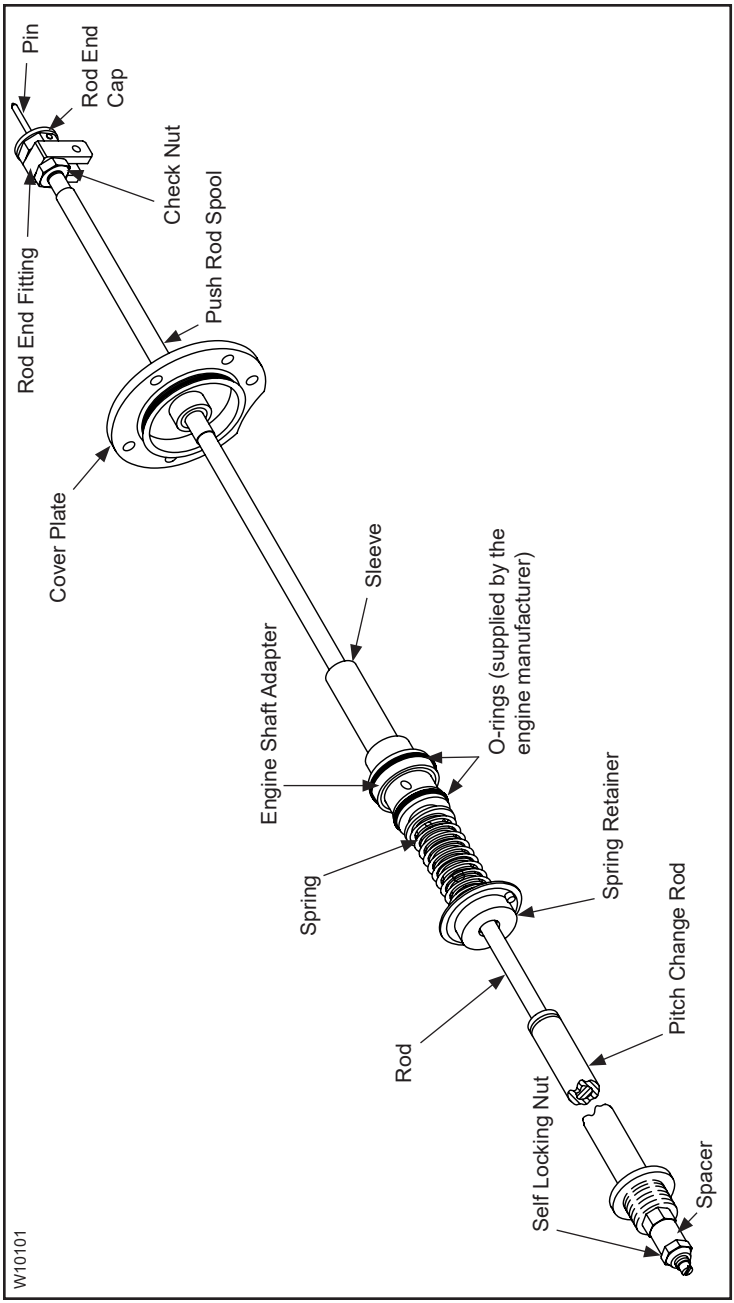

Beta Valve System
Figure 3-12

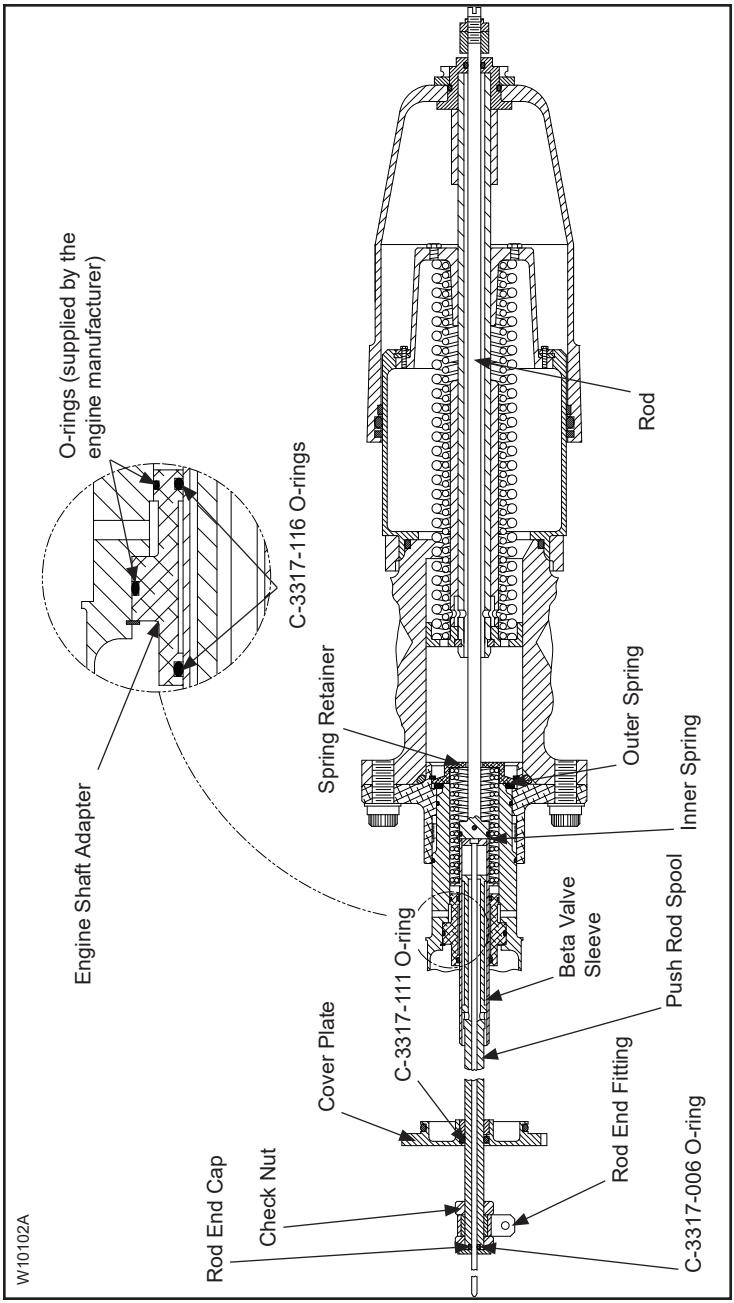

Cross Section View of the Beta Valve System
Figure 3-13

G. Installing HC-( )3( )( )-7( ) Propeller on the Allison Engine

NOTE: This propeller incorporates a beta valve assembly (Figures 3-12 and 3-13), which is installed inside of the propeller shaft and extends from the rear of the engine to the front of the propeller piston. The beta valve assembly is installed in the engine shaft before the propeller is installed.

(1) Make sure that the engine shaft adapter (Refer to Figure 3-13) is installed in the engine shaft.

(2) Install the C-3317-116 O-rings in the two grooves (Refer to Figure 3-13) of the engine shaft adapter.

(3) Remove the cover plate from the rear of engine case. Refer to Figures 3-12 and 3-13.

(4) Prepare the beta valve. Refer to Figures 3-12 and 3-13.

NOTE: The beta valve should be preassembled as shown in Figure 3-12 less the pitch change rod, engine shaft adapter, engine supplied O-rings and cover plate when new or from overhaul.

(a) If the beta valve is supplied preassembled, remove the self locking nut, spacer, rod end cap, rod end fitting, bushing and check nut.

(b) If the beta valve is supplied disassembled, assemble as follows:

1 Slide the push rod spool onto the pin and into the sleeve with the threaded end facing away from the sleeve.

2 Slide the inner and outer springs onto the rod up to and against the shoulder of the sleeve.

3 Install the spring retainer onto the rod with the recessed center section facing toward the two springs.

(5) Slide the partially assembled beta valve into the engine shaft from the front, allowing the push rod spool to extend out the rear of the engine.

(a) The shoulder of the sleeve should be against the shaft adapter.

(6) Compress the springs with spring retainer and install the retaining ring that is furnished with the engine to secure the spring retainer.

NOTE: A locator button on the spring retainer will fit into a recess in the engine shaft/flange.

(7) Install the ID and OD O-rings on the engine cover, per the airframe or engine manufacturer's instructions.

(8) Install the engine cover on the rear of the engine gear box encircling the beta valve push rod spool, per airframe or engine manufacturer's instructions.

NOTE: Cover plate fasteners are supplied by the engine manufacturer.

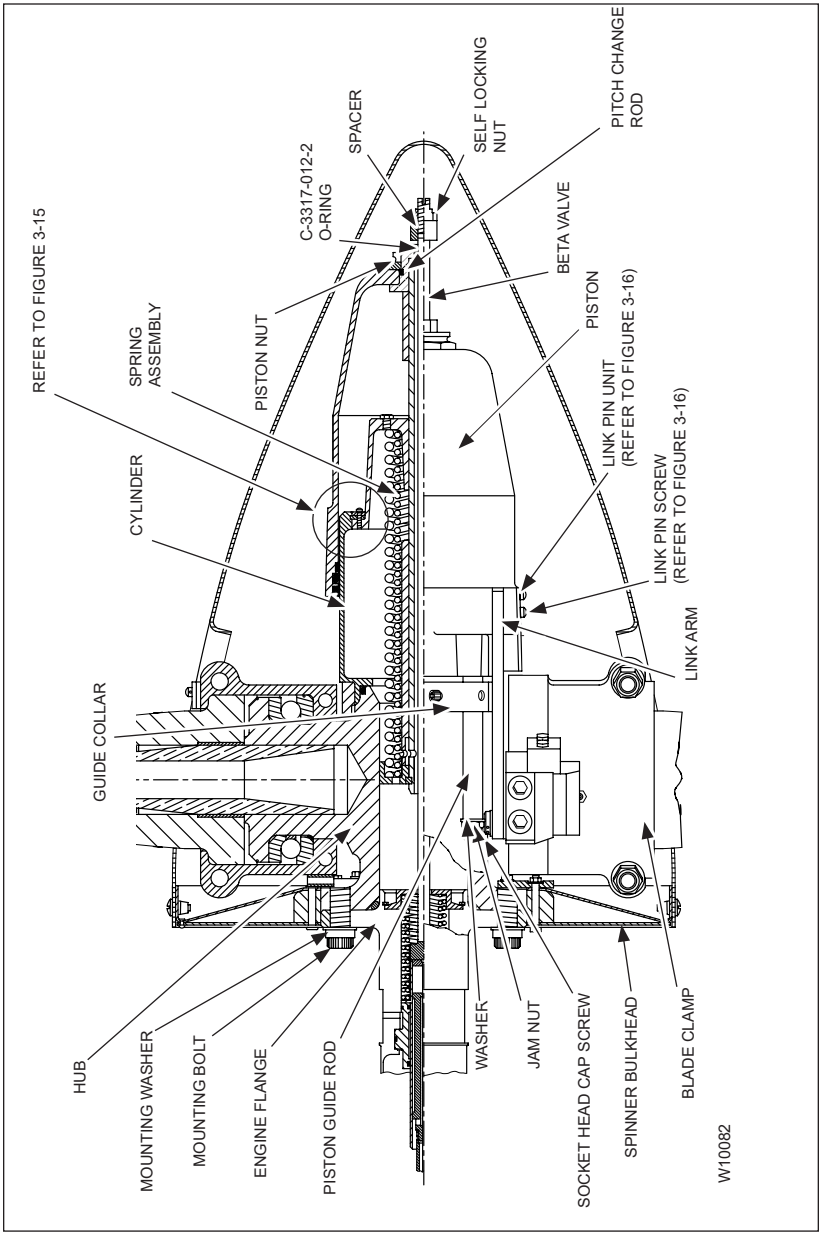

-7( ) Propeller Assembly
Figure 3-14

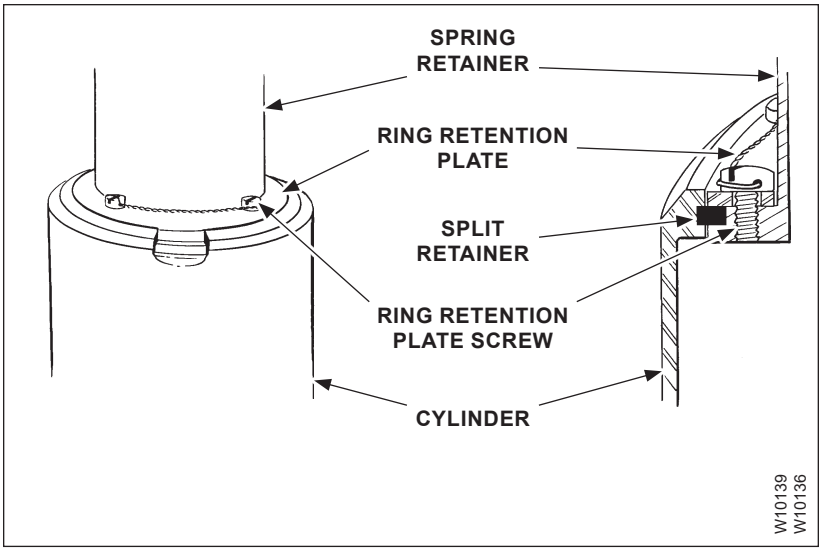

Spring Assembly to Cylinder Attachment Details
Figure 3-15

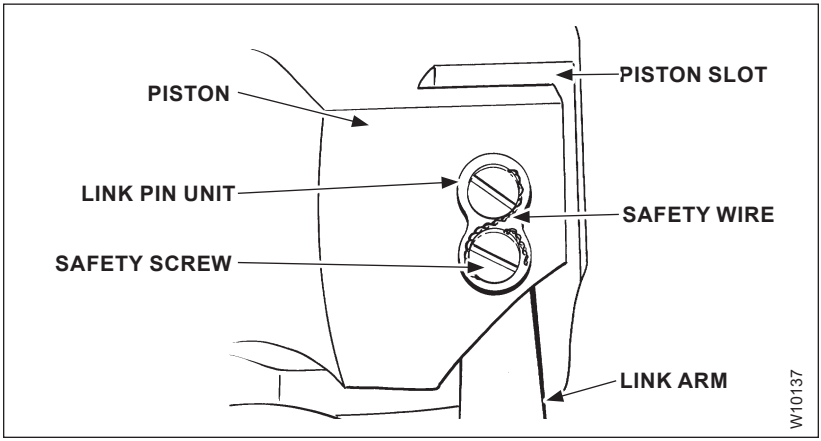

Piston to Link Arm Attachment Details
Figure 3-16

(9) Prepare the propeller for installation (Refer to Figures 3-14 through 3-16).

(a) Piston removal

1 Remove the flexlock nut with a 1-7/16 inch wrench, if installed.

2 Remove the safety wire from the three link pin units.

3 Remove the safety screws from the link pin units.

4 Remove the link pin units.

5 Mark the piston and link pins with a felt tip pen or equivalent, so the piston can be reinstalled in the same position.

6 Slide the link arms out of the piston slots.

7 Remove the socket head cap screw, jam nut, and washer from each piston guide rod.

8 Slide the piston off the cylinder.

(b) Spring assembly removal.

1 Remove the ring retention plate screw safety wire.

2 Remove the ring retention plate screws.

3 Remove the retention plate.

4 Remove the split retainer.

5 Remove the spring assembly from the cylinder.

WARNING: MAKE SURE THE SLING IS RATED UP TO 800 LBS (363 KG) TO SUPPORT THE WEIGHT OF THE PROPELLER ASSEMBLY DURING REMOVAL.

CAUTION: INSERT THE DOWEL PINS INTO THE PROPELLER FLANGE USING A BRASS HAMMER OR EQUIVALENT TOOL TO PREVENT DAMAGE TO THE DOWEL PINS. THE DOWEL PINS ARE AN INTERFERENCE FIT WITH THE PROPELLER FLANGE.

(10) Insert two dowel pins (Refer to Table 3-1) through the threadless holes in the propeller flange, flush with the propeller side of the hub flange. The dowel pins will protrude from the engine-side of the hub flange to engage the engine flange.

(11) With a suitable crane hoist and sling, carefully move the propeller assembly to the aircraft engine mounting flange.

NOTE: If the propeller is equipped with a de-ice system, refer to the General Maintenance Practices section in the Introduction chapter of this manual.

(12) Make sure the propeller hub flange and engine flange mating surfaces are clean.

(13) Install the specified O-ring on the engine flange. Refer to Table 3-1.

CAUTION: DO NOT ALLOW THE PROPELLER ASSEMBLY TO HIT OR REST ON THE BETA FEEDBACK ROD. THIS COULD BEND OR OTHERWISE DAMAGE THE FEEDBACK ROD.

(14) Slide the propeller over the beta valve assembly.

(15) Align the mounting holes and dowel pins in the propeller hub flange with the mounting holes and dowel pin holes in the engine flange.

CAUTION: MAKE SURE THAT COMPLETE AND TRUE SURFACE CONTACT IS ESTABLISHED BETWEEN THE PROPELLER HUB FLANGE AND THE ENGINE FLANGE.

(16) Slide the propeller hub flange onto the engine flange.

CAUTION 1: ID CHAMFER OF THE WASHER MUST BE FACING TOWARD THE BOLT HEAD. WASHERS WITHOUT CHAMFER MUST BE INSTALLED WITH ROLLED EDGES TOWARD THE BOLT HEAD (FIGURE 3-3).

CAUTION 2: NEW PROPELLER MOUNTING BOLTS MUST BE USED WHEN INITIALLY INSTALLING A NEW OR OVERHAULED PROPELLER.

(17) Install the propeller mounting bolts and washers through the engine flange and into the propeller hub flange. Refer to Table 3-1 for appropriate mounting hardware.

NOTE: If the propeller is removed between overhaul intervals, mounting bolts and washers may be reused if they are not damaged or corroded.

(18) Use a torque wrench and torque wrench adapter TE152 to torque all mounting bolts in sequences and steps shown in Figure 3-2. Refer to Table 3-2 and Figure 3-1 to determine the proper torque value.

(19) Safety all mounting bolts with 0.032 inch (0.81 mm) minimum diameter stainless steel wire or equivalent aircraft safety cable and associated hardware (two bolts per safety).

(20) Reinstall the spring assembly (refer Figure 3-14 and Figure 3-15).

(a) Slide the spring assembly into the cylinder and around the beta valve rod.

(b) Install split retainer between the cylinder and front spring retainer. Slide retainer into the recess in the cylinder.

(c) Pull the spring retainer tight against the split retainer.

(c) Pull the spring retainer tight against the split retainer.

(d) Install the ring retention plate.

(e) Install the ring retention plate screws and tighten until snug.

(f) Safety screws with 0.032 inch (0.81 mm) minimum diameter stainless steel safety wire or equivalent aircraft safety cable and associated hardware (two bolts per safety).

(21) Install the C-3317-012-2 O-ring in the front inside cavity of the pitch change rod. Refer to Figure 3-14.

(22) Reinstall the piston on the cylinder and pitch change rod in the same position it was before disassembly. Refer to Figures 3-14 and 3-16.

(a) Reconnect the link arms to the piston.

(b) Install the link pin units.

(c) Install the link pin unit safety screws.

(d) Safety the link pin screws with 0.032 inch (0.81 mm) minimum diameter stainless steel safety wire. Refer to Figure 3-16.

(e) Hand tighten the A-880-1 piston nut on the pitch change rod.

(f) Position a breaker bar and a 5/8 inch deep well socket on the pitch change rod.

(g) Use a crowfoot wrench and torque wrench to torque the A-880-( ) piston nut. Refer to Table 3-2 and Figure 3-1 for the proper torque value.

NOTE: The removal and subsequent reinstallation of the piston nut does not require that the propeller blade angles be re-checked.

(h) Install a socket head screw, washer and jam nut onto each piston guide rod. Refer to Figure 3-14.

(i) Torque the jam nuts on the piston guide rods as indicated in Table 3-2.

CAUTION: THE ROD END CAP MUST BOTTOM ON THE PUSH ROD SPOOL WHEN INSTALLED.

(23) Install the rod end cap onto the threaded end of the push rod spool.

NOTE: Do not tighten the set screw in the rod end cap.

(a) Mark the location of the set screw on the rod and then remove the end cap unit.

(b) File a flat, tangent to the rod, no deeper than the depth of the threads at the marked location of the set screw. Refer to Figure 3-17.

(24) Install the check nut onto the threaded end of the push rod spool.

(25) Install the bushing onto the threaded end of the push rod spool.

(26) Install the rod end fitting onto the threaded end of the push rod spool.

(27) Install the C-3317-006 O-ring in the cavity at the rear end of the push rod spool.

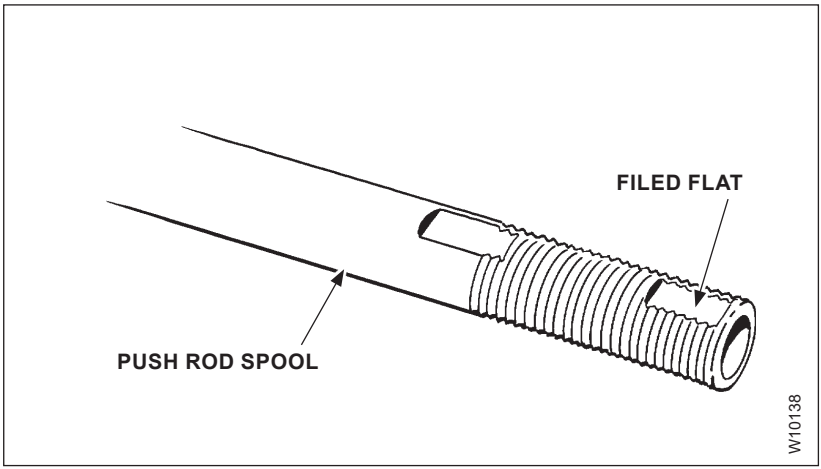

Filed Rod for Set Screw
Figure 3-17

(28) Install the rod end cap onto the threaded end of the push rod spool.

NOTE: Make sure the rod end cap is bottomed on the end of the push rod spool.

(a) Apply Loctite® 272 to the set screw threads.

(b) Tighten the set screw.

(29) Apply Loctite® 272 to the push rod threads where the check nut will be located on the push rod spool next to the bushing.

(30) Tighten the check nut against the bushing to torque indicated in Table 3-2.

(31) Attach engine mounted beta system control hardware to rod end fitting and adjust per airframe or engine manufacturer's instructions.

(32) Install the beta light switch against the pin per airframe manufacturer's instructions.

(33) Install the spacer and self-locking nut onto the front of the rod that protrudes through the front of the pitch change rod and piston.

(a) Follow the airframe manufacturer's instructions for making pitch control adjustments.

(34) If the propeller is equipped with an ice protection system that uses components supplied by Hartzell Propeller, refer to Hartzell Propeller Ice Protection System Manual 180 (30-61-80) for applicable instructions and technical information.

(35) Propeller ice protection system components not supplied by Hartzell Propeller, refer to the applicable TC or STC holder's Instructions for Continued Airworthiness (ICA).

5. Spinner Dome Installation (Rev. 3)

CAUTION 1: TO PREVENT DAMAGE TO THE BLADE AND BLADE PAINT, WRAP THE BLADE SHANKS IN SEVERAL LAYERS OF MASKING OR DUCT TAPE BEFORE INSTALLING THE SPINNER DOME. REMOVE THE TAPE AFTER THE SPINNER IS INSTALLED.

CAUTION 2: SPINNER DOME WILL WOBBLE IF NOT ALIGNED PROPERLY, AND MAY AFFECT THE DYNAMIC BALANCE OF THE PROPELLER.

NOTE 1: The following instructions relate to Hartzell Propeller spinners only. In some cases, the airframe manufacturer produced the spinner assembly. If so, refer to the airframe manufacturer's manual for spinner installation instructions.

NOTE 2: The B-3845-8 screws supplied with metal spinner assemblies are 0.500 inch (12.70 mm) in length. If correct thread engagement cannot be achieved when installing the spinner dome, B-3845-9 screws may be used. The B-3845-9 screws are 0.562 inch (14.27 mm) in length.

A. Installation Procedure

(1) Install the spinner dome.

(a) If anti-ice travel tubes are installed:

CAUTION: THE TRAVEL TUBES MUST NOT TOUCH THE SPINNER DOME BLADE CUTOUT.

1 Make sure there is clearance between the travel tubes and the spinner dome blade cutouts.

2 Make adjustments to the position of the travel tubes in accordance to Hartzell Propeller Manual 180 (30-61-80).

Spinner Dome/Cap	Washer	Screw
Metal Dome	A-1020 Washer, Fiber	B-3845-8 10-32, Truss Head

Spinner Dome and Spinner Cap Mounting Hardware
Table 3-3

CAUTION: MAKE SURE OF PROPER THREAD ENGAGEMENT FOR THE SCREWS IN THE NUTPLATES. APPROXIMATELY 1 TO 1 1/2 THREADS MUST EXTEND PAST THE BULKHEAD NUTPLATES. TO AVOID DAMAGING THE AIRCRAFT COWLING, THE SCREWS MUST NOT EXTEND MORE THAN THREE THREADS PAST THE BULKHEAD NUTPLATES.

(2) Attach the spinner dome to the spinner bulkhead with the supplied screws and washers. Refer to Table 3-3.

(a) Install a screw in the hole(s) centered between each two adjacent blade cutouts.

1 If the centerline between the adjacent blade cutouts does not align with a mounting hole, install screws in the two holes closest to the centerline.

CAUTION: BE SURE THE SCREWS DRAW THE SPINNER DOME TIGHT TO THE BULKHEAD.

(b) Tighten the screws until snug, then turn an additional 1/8 rotation.

CAUTION: IN THE FOLLOWING STEP, TIGHTEN EACH SCREW BEFORE INSTALLING THE NEXT SCREW.

(c) Working from the screw(s) previously installed at the centerline toward the blade cutouts, install the remaining screws one at a time.

1 Tighten each screw until snug, then turn an additional 1/8 rotation before installing the next screw.

6. Post-Installation Checks

A. Procedure

(1) Refer to the airframe manufacturer's instructions for post-installation checks.

(2) Perform a maximum RPM (Static) hydraulic low pitch stop check in accordance with the Testing and Troubleshooting chapter of this manual.

7. Spinner Removal

CAUTION: TO PREVENT DAMAGING THE BLADE AND BLADE PAINT, WRAP THE BLADE SHANKS IN SEVERAL LAYERS OF MASKING OR DUCT TAPE BEFORE REMOVING THE SPINNER DOME.

A. Procedure

(1) Remove the screws and washers that secure the spinner dome to the spinner bulkhead.

(2) Remove the spinner dome.

WARNING 1: DURING PROPELLER REMOVAL, AIRFRAME MANUFACTURER'S MANUALS AND PROCEDURES MUST BE FOLLOWED BECAUSE THEY MAY CONTAIN ISSUES VITAL TO AIRCRAFT SAFETY THAT ARE NOT CONTAINED IN THIS MANUAL OR THE HARTZELL PROPELLER OVERHAUL MANUAL 118F (61-10-18) AND MANUAL 132A (61-10-32).

WARNING 2: FOR SAFETY REASONS, THE PROPELLER MUST BE PUT IN FEATHER POSITION BEFORE IT IS REMOVED FROM THE AIRCRAFT.

WARNING 3: DURING ENGINE INSTALLATION OR REMOVAL, USING THE PROPELLER TO SUPPORT THE WEIGHT OF THE ENGINE IS NOT AUTHORIZED. UNAPPROVED INSTALLATION AND REMOVAL TECHNIQUES MAY CAUSE DAMAGE TO THE PROPELLER THAT MAY LEAD TO FAILURE AND RESULT IN AN AIRCRAFT ACCIDENT.

CAUTION: INSTRUCTIONS AND PROCEDURES IN THIS SECTION MAY INVOLVE CRITICAL PARTS. REFER TO THE INTRODUCTION CHAPTER OF THIS MANUAL FOR INFORMATION ABOUT PROPELLER CRITICAL PARTS. REFER TO THE ILLUSTRATED PARTS LIST CHAPTER OF THE APPLICABLE OVERHAUL MANUAL(S) FOR THE IDENTIFICATION OF SPECIFIC PROPELLER CRITICAL PARTS.

8. Propeller Removal

A. Removal of HC-B(3,5)( )( )-2( ) Propellers

(1) Remove the spinner dome in accordance with the procedure in the Spinner Dome Removal section of this chapter.

(a) If the propeller is equipped with an ice protection system that uses components supplied by Hartzell Propeller, refer to Hartzell Propeller Ice Protection System Manual 180 (30-61-80) for applicable instructions and technical information.

(b) Propeller ice protection system components not supplied by Hartzell Propeller, refer to the applicable TC or STC holder's Instructions for Continued Airworthiness (ICA).

(2) Cut and remove the safety wire on the propeller mounting bolts.

WARNING: MAKE SURE THE SLING IS RATED UP TO 800 LBS (363 KG) TO SUPPORT THE WEIGHT OF THE PROPELLER ASSEMBLY DURING REMOVAL.

(3) Support the propeller assembly with a sling.

NOTE 1: Supporting the propeller with the sling may be delayed until all but two mounting bolts and washers have been removed to allow rotating the propeller for ease of bolt removal.

NOTE 2: If the propeller will be reinstalled, and it has been dynamically balanced, make an identifying mark on the propeller hub and a matching mark on the engine flange to ensure proper orientation during re-installation to prevent dynamic imbalance.

CAUTION: DISCARD THE PROPELLER MOUNTING BOLTS IF THEY ARE DAMAGED OR CORRODED, OR WHEN THE PROPELLER IS REMOVED FOR OVERHAUL.

(4) Remove the propeller mounting bolts and washers.

NOTE: If the propeller is removed between overhaul intervals, mounting bolts and washers may be reused if they are not damaged or corroded.

CAUTION: USE ADEQUATE PRECAUTIONS TO PROTECT THE PROPELLER ASSEMBLY FROM DAMAGE WHEN IT IS REMOVED FROM THE AIRCRAFT ENGINE AND WHEN IT IS STORED.

(5) Using the support sling, lift the propeller from the mounting flange.

(6) Remove and discard the propeller mounting O-ring.

(7) Place the propeller on a suitable cart for transportation.

B. Removal of HC-B(3,4,5)( )(A,N,P)-3( ) Propellers

(1) Remove the spinner dome in accordance with the procedure in the Spinner Dome Removal section of this chapter.

(a) If the propeller is equipped with an ice protection system that uses components supplied by Hartzell Propeller, refer to Hartzell Propeller Ice Protection System Manual 180 (30-61-80) for applicable instructions and technical information.

(b) Propeller ice protection system components not supplied by Hartzell Propeller, refer to the applicable TC or STC holder's Instructions for Continued Airworthiness (ICA).

(2) Disconnect the engine beta linkage and carbon block assembly from the beta ring per the airframe manufacturer's instructions. Refer to Figure 3-7.

(a) If the carbon block must be removed, perform the following procedures:

1 Remove the snap ring that retains the carbon block assembly to the beta linkage.

2 Remove the carbon block assembly.

CAUTION: MAKE SURE THAT THE BETA LINKAGE IS DISCONNECTED BEFORE COMPRESSING THE BETA SYSTEM.

(3) Use the beta ring puller TE100 to compress the beta system and pull the beta ring forward to expose the propeller mounting bolts and washers. Refer to Figure 3-5.

(4) Cut and remove the safety wire on the propeller mounting bolts.

WARNING: MAKE SURE THE SLING IS RATED UP TO 800 LBS (363 KG) TO SUPPORT THE WEIGHT OF THE PROPELLER ASSEMBLY DURING REMOVAL.

(5) Support the propeller assembly with a sling.

NOTE 1: Supporting the propeller with the sling may be delayed until all but two mounting bolts and washers have been removed to allow rotating the propeller for ease of bolt removal.

NOTE 2: If the propeller will be reinstalled, and it has been dynamically balanced, make an identifying mark on the propeller hub and a matching mark on the engine flange to ensure proper orientation during re-installation to prevent dynamic imbalance.

CAUTION: DISCARD THE PROPELLER MOUNTING BOLTS IF THEY ARE DAMAGED OR CORRODED, OR WHEN THE PROPELLER IS REMOVED FOR OVERHAUL.

(6) Remove the propeller mounting bolts and washers.

NOTE: If the propeller is removed between overhaul intervals, mounting bolts and washers may be reused if they are not damaged or corroded.

CAUTION: USE ADEQUATE PRECAUTIONS TO PROTECT THE PROPELLER ASSEMBLY FROM DAMAGE WHEN IT IS REMOVED FROM THE AIRCRAFT ENGINE AND WHEN IT IS STORED.

(7) Using the support sling, lift the propeller from the mounting flange.

(8) Remove and discard the propeller mounting O-ring.

(9) Decompress and remove the beta ring puller TE100.

(10) Place the propeller on a suitable cart for transportation.

C. Removal of HC-B(3,4)( )W-3( ) Propellers

(1) Remove the spinner dome in accordance with the procedure in the Spinner Dome Removal section of this chapter.

(a) If the propeller is equipped with an ice protection system that uses components supplied by Hartzell Propeller, refer to Hartzell Propeller Ice Protection System Manual 180 (30-61-80) for applicable instructions and technical information.

(b) Propeller ice protection system components not supplied by Hartzell Propeller, refer to the applicable TC or STC holder's Instructions for Continued Airworthiness (ICA).

(2) Disconnect the engine beta linkage and carbon block assembly from the beta ring per the airframe manufacturer's instructions. Refer to Figure 3-7.

(a) If the carbon block must be removed, perform the following procedures:

1 Remove the snap ring that retains the carbon block assembly to the beta linkage.

2 Remove the carbon block assembly.

CAUTION: MAKE SURE THAT THE BETA LINKAGE IS DISCONNECTED BEFORE COMPRESSING THE BETA SYSTEM.

(3) Use the beta ring puller TE100 to compress the beta system and pull the beta ring forward to expose the propeller mounting nuts and washers. Refer to Figure 3-5.

(4) Cut and remove the safety wire on the propeller mounting studs.

WARNING: MAKE SURE THE SLING IS RATED UP TO 800 LBS (363 KG) TO SUPPORT THE WEIGHT OF THE PROPELLER ASSEMBLY DURING REMOVAL.

(5) Support the propeller assembly with a sling.

NOTE: If the propeller will be reinstalled, and it has been dynamically balanced, make an identifying mark on the propeller hub and a matching mark on the engine flange to ensure proper orientation during re-installation to prevent dynamic imbalance.

CAUTION: DISCARD THE PROPELLER MOUNTING NUTS AND/OR WASHERS IF THEY ARE DAMAGED OR CORRODED, OR WHEN THE PROPELLER IS REMOVED FOR OVERHAUL.

(6) Remove the propeller mounting nuts and washers.

NOTE: If the propeller is removed between overhaul intervals, mounting nuts and washers may be reused if they are not damaged or corroded.

CAUTION: USE ADEQUATE PRECAUTIONS TO PROTECT THE PROPELLER ASSEMBLY FROM DAMAGE WHEN IT IS REMOVED FROM THE AIRCRAFT ENGINE AND WHEN IT IS STORED.

(7) Using the support sling, lift the propeller from the mounting flange.

(8) Remove and discard the engine flange-to-spacer O-ring.

(9) Remove the spacer attachment screws from the C-7364-2 spacer, if applicable.

(10) Remove the C-7364-2 spacer.

(11) Remove and discard the propeller hub-to-spacer O-ring.

(12) Decompress and remove the beta ring puller TE100.

(13) Place the propeller on a suitable cart for transportation.

D. Removal of HC-B(3,4,5)( )( )-5( ) Propellers

(1) Remove the spinner dome in accordance with the procedure in the Spinner Dome Removal section of this chapter.

(a) If the propeller is equipped with an ice protection system that uses components supplied by Hartzell Propeller, refer to Hartzell Propeller Ice Protection System Manual 180 (30-61-80) for applicable instructions and technical information.

(b) Propeller ice protection system components not supplied by Hartzell Propeller, refer to the applicable TC or STC holder's Instructions for Continued Airworthiness (ICA).

CAUTION: THE BETA TUBE MUST BE REMOVED BEFORE THE PROPELLER ASSEMBLY IS REMOVED FROM THE AIRCRAFT. REFER TO THE AIRCRAFT MAINTENANCE INSTRUCTION MANUAL.

(2) Remove the beta adjust anti-rotation hardware.

(3) Remove the beta adjust screw.

(4) Remove the beta tube.

(5) Cut and remove the safety wire on the propeller mounting bolts.

WARNING: MAKE SURE THE SLING IS RATED UP TO 800 LBS (363 KG) TO SUPPORT THE WEIGHT OF THE PROPELLER ASSEMBLY DURING REMOVAL.

(6) Support the propeller assembly with a sling.

NOTE: If the propeller will be reinstalled, and it has been dynamically balanced, make an identifying mark on the propeller hub and a matching mark on the engine flange to ensure proper orientation during re-installation to prevent dynamic imbalance.

CAUTION: DISCARD THE PROPELLER MOUNTING BOLTS IF THEY ARE DAMAGED OR CORRODED, OR WHEN THE PROPELLER IS REMOVED FOR OVERHAUL.

(7) Remove the propeller mounting bolts and washers.

NOTE: If the propeller is removed between overhaul intervals, mounting bolts and washers may be reused if they are not damaged or corroded.

CAUTION: USE ADEQUATE PRECAUTIONS TO PROTECT THE PROPELLER ASSEMBLY FROM DAMAGE WHEN IT IS REMOVED FROM THE AIRCRAFT ENGINE AND WHEN IT IS STORED.

(8) Using the support sling, lift the propeller from the mounting flange.

(9) If the propeller has a two-piece spinner mounting plate, go to step (11).

(10) Propellers with the one-piece spinner mounting plate only. Refer to Figure 3-11:

(a) Remove the spinner mounting plate, spinner bulkhead and start locks, as a unit, from the propeller hub flange.

(11) Remove and discard propeller mounting O-ring.

(12) Place the propeller on a suitable cart for transportation.

E. Removal of HC-( )3( )( )-7( ) Propellers

NOTE: Refer to Figures 3-12 through 3-16 for the Beta Valve System.

(1) Remove the spinner dome in accordance with the procedure in the Spinner Dome Removal section of this chapter.

(a) If the propeller is equipped with an ice protection system that uses components supplied by Hartzell Propeller, refer to Hartzell Propeller Ice Protection System Manual 180 (30-61-80) for applicable instructions and technical information.

(b) Propeller ice protection system components not supplied by Hartzell Propeller, refer to the applicable TC or STC holder's Instructions for Continued Airworthiness (ICA).

(2) Remove the self-locking nut and spacer from the beta system rod that protrudes from the pitch change rod and piston.

(3) Prepare the propeller for removal. Refer to Figures 3-14 through 3-16.

(a) Piston Removal

1 Remove the flexlock nut using torque wrench adapter TE152 or a 1-7/16 inch wrench, if installed.

2 Remove the safety wire from the three link pin units.

3 Remove the safety screws from the link pin units.

4 Remove the link pin units.

5 Mark the piston and link pins with a felt tip pen or equivalent, so the piston can be reinstalled in the same position.

6 Slide the link arms out of the piston slots.

7 Remove the socket head cap screw, jam nut, and washer from each piston guide rod.

8 Slide the piston off the cylinder.

(b) Spring assembly removal.

1 Remove the ring retention plate screw safety wire.

2 Remove the ring retention plate screws.

3 Remove the retention plate.

4 Remove the split retainer.

5 Remove the spring assembly from the cylinder.

(4) Cut and remove the safety wire on the propeller mounting bolts.

WARNING: MAKE SURE THE SLING IS RATED UP TO 800 LBS (363 KG) TO SUPPORT THE WEIGHT OF THE PROPELLER ASSEMBLY DURING REMOVAL.

(5) Support the propeller assembly with a sling.

NOTE 1: Supporting the propeller with the sling may be delayed until all but two mounting bolts and washers have been removed to allow rotating the propeller for ease of bolt removal.

NOTE 2: If the propeller will be reinstalled, and it has been dynamically balanced, make an identifying mark on the propeller hub and a matching mark on the engine flange to ensure proper orientation during re-installation to prevent dynamic imbalance.

CAUTION: DISCARD THE PROPELLER MOUNTING BOLTS IF THEY ARE DAMAGED OR CORRODED, OR WHEN THE PROPELLER IS REMOVED FOR OVERHAUL.

(6) Remove the propeller mounting bolts and washers.

NOTE: If the propeller is removed between overhaul intervals, mounting bolts and washers may be reused if they are not damaged or corroded.

CAUTION 1: DO NOT ALLOW THE PROPELLER ASSEMBLY TO HIT OR REST ON THE BETA FEEDBACK ROD. THIS COULD BEND OR OTHERWISE DAMAGE THE ROD.

CAUTION 2: USE ADEQUATE PRECAUTIONS TO PROTECT THE PROPELLER ASSEMBLY FROM DAMAGE WHEN IT IS REMOVED FROM THE AIRCRAFT ENGINE AND WHEN IT IS STORED.

(7) Using the support sling, lift the propeller from the mounting flange.

(8) Remove and discard the propeller mounting O-ring.

(9) Place the propeller on a suitable cart for transportation.

F. Removal of Beta Valve Assembly for HC-( )3( )( )-7( ) Propellers

(1) Remove the beta light switch from the beta valve pin per airframe manufacturer's instructions.

(2) Remove the engine mounted beta system control hardware from the beta valve rod end fitting, per the airframe/engine manufacturer's instructions.

(3) Loosen the check nut on the push rod spool from the bushing to break the Loctite® bond.

(4) Loosen the set screw to clear the threads of the push rod spool and to allow removal of the rod end cap.

(5) Loosen the rod end cap to break the Loctite® bond and remove the rod end cap from the push rod spool.

(6) Remove the rod end fitting from the push rod spool.

(7) Remove the bushing from the push rod spool.

(8) Remove the check nut from the push rod spool.

(9) Remove the O-ring from the cavity at the rear of the threaded end of the push rod spool.

(10) Remove the engine cover from the rear of the engine gear box encircling the beta valve push rod spool per the airframe or engine manufacturer's instructions.

(11) Remove and discard the ID and OD O-rings from the engine cover.

WARNING: TO AVOID INJURY, SPRINGS IN THE ENGINE SHAFT ARE PRELOADED AND MUST BE PROPERLY CONTROLLED WHEN RELEASING THE SPRING RETAINER.

(12) Secure the spring retainer and remove the retaining ring that holds the spring retainer in place.

(13) Remove the spring retainer from the engine shaft and beta valve.

(14) Remove the inner and outer springs from the engine shaft and beta valve.

(15) Slide the beta valve's remaining assembly and push rod spool out of the engine shaft toward where the propeller had been mounted.

(16) Place all beta valve parts together, including the self locking nut and spacer that were removed to allow the removal of the propeller assembly.

(Blank Page)

TESTING AND TROUBLESHOOTING - CONTENTS

(Blank Page)

1. Operational Checks (Rev. 1)
   A. Operational Checks
      (1) Refer to the Inspection and Check chapter of this manual for operational checks including pre-flight, initial run-up, and post-run checks.

2. Propeller Ice Protection Systems (Rev. 2)

   WARNING: CONSULT THE PILOT OPERATING HANDBOOK (INCLUDING ALL SUPPLEMENTS) REGARDING FLIGHT INTO CONDITIONS OF KNOWN ICING. THE AIRCRAFT MAY NOT BE CERTIFICATED FOR FLIGHT INTO KNOWN ICING CONDITIONS, EVEN THOUGH AN ICE PROTECTION SYSTEM IS INSTALLED.

   A. Operational Checks and Troubleshooting
      (1) Refer to the Anti-ice and De-ice Systems chapter of this manual for operational checks and troubleshooting information for Hartzell Propeller ice protection systems.

3. Troubleshooting

CAUTION: INSTRUCTIONS AND PROCEDURES IN THIS SECTION MAY INVOLVE PROPELLER CRITICAL PARTS. REFER TO THE INTRODUCTION CHAPTER OF THIS MANUAL FOR INFORMATION ABOUT PROPELLER CRITICAL PARTS. REFER TO THE ILLUSTRATED PARTS LIST CHAPTER OF THE APPLICABLE OVERHAUL MANUAL(S) FOR THE IDENTIFICATION OF SPECIFIC PROPELLER CRITICAL PARTS.

A. Hunting and Surging (Rev. 2)

(1) General

(a) Hunting is characterized by a cyclic variation in engine speed above and below desired speed. Surging is characterized by a large increase/decrease in engine speed, followed by a return to set speed after one or two occurrences.

(b) If the propeller is hunting, a certified airframe and powerplant mechanic with the appropriate rating or a certified propeller repair station with the appropriate rating should check:

1 Governor

2 Fuel control

3 Synchrophaser or synchronizer

(2) If propeller is surging:

(a) Perform the "Initial Run-up" in accordance with the Inspection and Check chapter of this manual to release trapped air from the propeller.

1 If surging reoccurs it is most likely due to a faulty governor.

a Have the governor tested by a certified propeller repair station with the appropriate rating.

(b) Hunting and/or surging may also be caused by friction or binding within the governor control, or internal propeller corrosion, which causes the propeller to react slower to governor commands.

1 To isolate these faults, the propeller must be tested on a test bench at a certified propeller repair station with the appropriate rating.

B. Engine Speed Varies with Airspeed

(1) Constant speed propeller models will experience small variances in engine speed that are normal and are no cause for concern.

(2) Increase in engine speed while descending or increasing airspeed:

(a) Governor is not reducing oil volume.

(b) Friction in propeller.

(3) Decrease in engine speed while increasing airspeed:

(a) Governor pilot valve is stuck and is excessively decreasing oil volume.

(b) Feathering command engaged on propeller pitch control.

(4) Increase in engine speed while decreasing airspeed:

(a) Governor pilot valve is stuck and is excessively increasing oil volume.

(5) Decrease in engine speed while decreasing airspeed:

(a) Governor is not increasing oil volume in propeller.

(b) Friction in propeller.

C. Loss of Propeller Control
   (1) Propeller goes to uncommanded high pitch (or feather)
      (a) Loss of propeller oil pressure - check:
         1 Governor pressure relief valve.
         2 Governor drive.
         3 Engine oil supply.
      (b) Start lock not engaging.
   (2) Propeller goes to uncommanded low pitch (high RPM)
      (a) Governor pilot valve sticking.
   (3) RPM increases with power and airspeed, propeller RPM control has little or no effect.
      (a) Excessive friction in blade bearings or pitch change mechanism.
      (b) Broken feathering spring.
   (4) RPM control sluggish (especially on reducing RPM).
      (a) Broken feathering spring.

D. Failure to Feather (or feathers slowly) (Rev. 1)
   (1) Broken feathering spring (if applicable).
   (2) Check for proper function and rigging of propeller/ governor control linkage.
   (3) Check the governor function.
   (4) The propeller must be inspected for misadjustment or internal corrosion (usually in blade bearings or pitch changing mechanism) that results in excessive friction.
      (a) This inspection must be performed by a certified propeller repair station with the appropriate rating.

E. Failure to Unfeather (Rev. 1)
   (1) Check for proper function and rigging of propeller control linkage.
   (2) Check the governor function.
   (3) The propeller must be inspected for misadjustment or internal corrosion (usually in blade bearings or pitch change mechanism) that results in excessive friction.
      (a) This inspection must be performed by a certified propeller repair station with the appropriate rating.

F. Start Lock Units Fail to Latch
(-2, -5 and some -3 Models)

(1) Propeller was feathered before shutdown.

(2) Shutdown occurred at high RPM with propeller control off the low pitch stop.

(a) The problem may be solved by restarting the engine, placing the propeller control in the proper shut down position, and then shutting down the engine.

(b) For HC-B(3,4,5)( )( )-5( ), the problem may be solved by using the engine auxiliary pump to reposition the propeller on the start lock units.

(3) Excessive governor pump leakage.

The problem should be referred to an appropriately licensed propeller repair facility.

(4) Broken start lock unit(s).

The problem should be referred to an appropriately licensed propeller repair facility.

G. Vibration (Rev. 1)

CAUTION 1: ANY VIBRATION THAT CAN BE DESCRIBED AS APPEARING SUDDENLY, OR IS ACCOMPANIED BY UNEXPLAINED GREASE LEAKAGE, SHOULD BE INVESTIGATED IMMEDIATELY BEFORE FURTHER FLIGHT.

CAUTION 2: VIBRATION PROBLEMS BECAUSE OF PROPELLER SYSTEM IMBALANCE ARE NORMALLY FELT THROUGHOUT THE RPM RANGE, WITH THE INTENSITY OF VIBRATION INCREASING WITH RPM. VIBRATION PROBLEMS THAT OCCUR IN A NARROW RPM RANGE ARE A SYMPTOM OF RESONANCE THAT IS POTENTIALLY HARMFUL TO THE PROPELLER. AVOID OPERATION UNTIL THE PROPELLER CAN BE CHECKED BY A CERTIFIED PROPELLER REPAIR STATION WITH THE APPROPRIATE RATING.

(1) Check:

(a) Control surfaces, cowl flaps, exhaust system, landing gear doors, etc. for excessive play that may be causing vibration that is unrelated to the propeller.

(b) Isolation of engine controls and lines

(c) Engine mount wear

(d) Uneven or over lubrication of propeller

(e) Proper engine/propeller flange mating

(f) Blade track:

1 Refer to the section, "Blade Track" in the Inspection and Check chapter of this manual.

(g) Blade angles:

1 Blade angle must be within specified tolerance between blades.

a Refer to a certified propeller repair station with the appropriate rating to check/adjust blade angles.

(h) Spinner for cracks, improper installation, or "wobble" during operation

(i) Static balance

(j) Hub damage or cracking

(k) Grease or oil leakage

(l) Blade deformation

(2) Dynamic Balance

(a) Dynamic balancing is recommended after installing or performing maintenance on a propeller. While this is normally an optional task, it may be required by the engine or airframe manufacturer to make certain the propeller/engine combination is balanced properly before operation.

1 Refer to the engine or airframe manuals, and the Maintenance Practices chapter of this manual.

H. Propeller Overspeed/Avoidance

(1) Check:

(a) Low pitch stop adjustment.

(b) Governor maximum RPM set too high.

(c) Broken feathering spring.

(d) Governor pilot valve jammed, supplying high pressure only.

(e) Tachometer error.

I. Propeller Underspeed

(1) Check:

(a) Governor oil pressure low.

(b) Governor oil passage clogged.

(c) Tachometer error.

(Blank Page)

INSPECTION AND CHECK - CONTENTS

INSPECTION AND CHECK - CONTENTS, CONTINUED

LIST OF FIGURES

1. Pre-Flight Checks (Rev. 5)

CAUTION: INSTRUCTIONS AND PROCEDURES IN THIS SECTION MAY INVOLVE PROPELLER CRITICAL PARTS. REFER TO THE INTRODUCTION CHAPTER OF THIS MANUAL FOR INFORMATION ABOUT PROPELLER CRITICAL PARTS. REFER TO THE ILLUSTRATED PARTS LIST CHAPTER OF THE APPLICABLE OVERHAUL MANUAL(S) FOR THE IDENTIFICATION OF SPECIFIC PROPELLER CRITICAL PARTS.

A. Important Information

(1) Follow propeller pre-flight inspection procedures as specified in the Pilot Operating Handbook (POH) in addition to the inspections specified in this section.

(2) Defects or damage found during the pre-flight inspection must be evaluated in accordance with the applicable section in the Testing and Troubleshooting chapter and/or the Maintenance Practices chapter of this manual.

B. Propeller Blades

(1) Visually examine the entire blade (leading edge, trailing edge, face, and camber sides) for nicks, gouges, erosion, and cracks.

(a) Normal erosion (sand-blasted appearance) on the leading edge of the blade is permitted and does not require removal before further flight.

(2) Visually examine the blades for lightning strike indications in accordance with the section, "Lightning Strike" in this chapter.

(3) Check the blades for radial play or movement of the blade tip (in-and-out, fore-and-aft, and end play).

(a) Refer to the section, "Blade Tolerances" in this chapter for blade play limits.

(4) If an ice protection system is installed, visually examine the anti-icing or de-ice boot for damage.

(a) Refer to the Anti-ice and De-ice Systems chapter in this manual for operational checks and troubleshooting information for Hartzell Propeller ice protection systems.

C. Spinner Assembly and Blade Retention Components

(1) Inspect the spinner and the visible blade retention components for damage and/or cracks.

(a) Repair or replace components as required before further flight.

D. Hardware

(1) Check for loose or missing hardware.

(a) Retighten or reinstall as necessary.

WARNING: ABNORMAL GREASE/OIL LEAKAGE CAN BE AN INDICATION OF A FAILING PROPELLER BLADE OR BLADE RETENTION COMPONENT. AN IN-FLIGHT BLADE SEPARATION CAN RESULT IN A CATASTROPHIC AIRCRAFT ACCIDENT.

E. Grease/Oil Leakage

(1) Examine the face and camber-sides of the blades for evidence of grease/oil leakage.

(2) Using an appropriate light source, examine the propeller through the blade cut-outs in the spinner for signs of grease/oil leakage.

(a) Spinner removal is not required for this inspection.

(b) If grease/oil leakage is found, refer to the section, "Inspection Procedures" in this chapter.

F. Initial Run-Up

(1) Perform the Initial Run-Up procedure in accordance with the section, "Operational Checks" in this chapter.

G. Additional Information

(1) Refer to the airframe manufacturer's manual for additional pre-flight checks.

(2) Refer to the section, "Inspection Procedures" in this chapter for additional inspection/repair information.

2. Post-Flight Checks

CAUTION: INSTRUCTIONS AND PROCEDURES IN THIS SECTION MAY INVOLVE CRITICAL PARTS. REFER TO THE INTRODUCTION CHAPTER OF THIS MANUAL FOR INFORMATION ABOUT PROPELLER CRITICAL PARTS. REFER TO THE ILLUSTRATED PARTS LIST CHAPTER OF THE APPLICABLE OVERHAUL MANUAL(S) FOR THE IDENTIFICATION OF SPECIFIC PROPELLER CRITICAL PARTS.

A. HC-B3TN-3DL/LT10282( )-9.5R Propellers Installed on Piaggio P-166 DL3 aircraft

(1) As a result of the "pusher" configuration, propeller blades on affected aircraft are exposed to hot exhaust gasses, which makes them more susceptible to erosion and corrosion. Additional inspections and corrosion preventative measures are required.

(a) Perform blade cleaning within three days after any flight.

NOTE: It is recommended to perform blade cleaning after the last flight of each day.

(b) Blade Cleaning

1 Use a cloth dampened with an approved solvent/cleaner to thoroughly clean each blade shank where exposed to engine exhaust and remove all foreign matter/exhaust residue.

2 Visually inspect for corrosion indications and paint condition.

3 Paint must be in good condition in the area exposed to exhaust gasses. Repair and repaint in accordance with the Maintenance Practices Chapter of this manual or by an appropriately licensed propeller repair facility if:

a Any of the underlying aluminum blade is exposed.

b There are any indications of corrosion, such as pitting or any other unusual conditions.

3. Operational Checks (Rev. 5)

CAUTION: INSTRUCTIONS AND PROCEDURES IN THIS SECTION MAY INVOLVE PROPELLER CRITICAL PARTS. REFER TO THE INTRODUCTION CHAPTER OF THIS MANUAL FOR INFORMATION ABOUT PROPELLER CRITICAL PARTS. REFER TO THE ILLUSTRATED PARTS LIST CHAPTER OF THE APPLICABLE OVERHAUL MANUAL(S) FOR THE IDENTIFICATION OF SPECIFIC PROPELLER CRITICAL PARTS.

A. Initial Run-up

(1) Following propeller installation and before flight, perform the Initial Run-up procedure in accordance with the instructions in this section.

WARNING: REFER TO THE AIRCRAFT MAINTENANCE MANUAL FOR ADDITIONAL PROCEDURES THAT MAY BE REQUIRED AFTER PROPELLER INSTALLATION.

(2) Perform engine start and warm-up in accordance with the Pilot's Operating Handbook (POH).

CAUTION: AIR TRAPPED IN THE PROPELLER HYDRAULIC CYLINDER WILL CAUSE PITCH CONTROL TO BE IMPRECISE AND CAN CAUSE PROPELLER SURGING.

(3) Cycle the propeller control through the operating blade range from low pitch to high pitch (or as specified in the POH).

(a) Repeat this step at least three times.

NOTE: Cycling the propeller control purges air from the propeller hydraulic system and introduces warm oil to the cylinder.

(4) Check the propeller speed control and operation from low pitch to high pitch using the procedure specified in the POH.

(a) Perform all ground functional, feathering, and cycling checks with the minimum propeller RPM drop required to demonstrate the function.

WARNING: ABNORMAL VIBRATION CAN BE AN INDICATION OF A FAILING PROPELLER BLADE OR BLADE RETENTION COMPONENT. AN IN-FLIGHT BLADE SEPARATION CAN RESULT IN DEATH, SERIOUS BODILY INJURY, AND/OR SUBSTANTIAL PROPERTY DAMAGE.

(5) Check for any abnormal vibration during this run-up.

(a) If vibration occurs, shut the engine down, determine the cause, and correct it before further flight.

1 Refer to the section, "Vibration" in the Testing and Troubleshooting chapter of this manual to determine the cause/correction for the vibration.

(6) Shut down the engine in accordance with the POH.

(7) For additional inspection information (including possible corrections), refer to the section, "Inspection Procedures" in this chapter, and/or the Testing and Troubleshooting chapter of this manual.

(8) Refer to the POH and the airframe manufacturer's manual for additional operational checks.

B. Propeller Ground Idle RPM Check

WARNING: STABILIZED GROUND OPERATION WITHIN THE PROPELLER RESTRICTED RPM RANGE CAN GENERATE HIGH PROPELLER STRESSES AND RESULT IN FATIGUE DAMAGE TO THE PROPELLER. THIS DAMAGE CAN LEAD TO A REDUCED PROPELLER FATIGUE LIFE, PROPELLER FAILURE, AND LOSS OF CONTROL OF THE AIRCRAFT. THE PROPELLER RESTRICTED RPM RANGE IS DEFINED IN THE AIRPLANE FLIGHT MANUAL.

(1) General

(a) Propellers with four or more blades operating on turbine engines can be sensitive to operation within restricted RPM ranges. These restricted ranges are usually in the lower RPM ranges, requiring that ground idle RPM be set above a critical minimum value.

(b) This minimum propeller idle RPM operating restriction is the result of a specific vibratory resonant condition known as "reactionless mode". During operation in these conditions the flight crew cannot feel the resulting high propeller vibration. Ground operation at or near an RPM that can create a reactionless mode vibratory resonance can cause very high stresses in the propeller blades and the hub. These high stresses are more severe when operating in a quartering tail wind condition.

(c) If the propeller is operated within a restricted RPM range or below a minimum idle RPM restriction for an extended period of time, the propeller blades and hub can become unairworthy because of fatigue. A failed blade or hub has the potential to cause a catastrophic blade separation.

(d) Use the "Periodic Ground Idle RPM Check" steps in this section to determine if the propeller is operating within the specified RPM limits.

(e) Refer to the "Corrective Action" steps in this section for maintenance information about propellers operating outside of the specified RPM range.

(2) Periodic Ground Idle RPM Check

NOTE: The accuracy of the tachometer is critical to the safe operation of the aircraft. Refer to the section, "Tachometer Calibration" in the Maintenance Practices chapter of this manual for important information.

(a) Perform the RPM check in accordance with the Airplane Flight Manual or Airplane Flight Manual Supplement.

1 Refer to the Airplane Flight Manual or Airplane Flight Manual Supplement to determine if there are any propeller RPM restrictions or limitations.

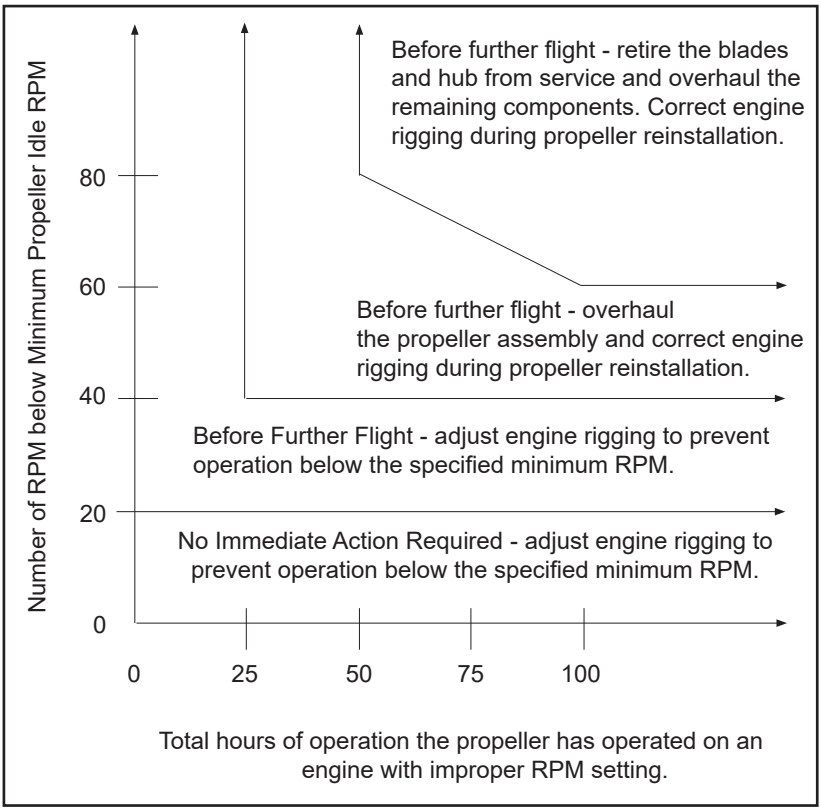

Corrective Action Required
Figure 5-1

(b) Perform an engine run up and determine if the engine and/or propeller rigging permits operation of the propeller below the minimum specified propeller idle RPM.

(c) If the propeller cannot be operated below the minimum specified propeller idle RPM, no further action is required.

(d) If the propeller can be operated below the minimum specified propeller idle RPM:

1 Refer to Figure 5-1 for corrective action requirements, and Figure 5-2 for an example of a ground idle RPM check evaluation.

2 The corrective action is based on the amount the RPM is below the minimum propeller idle RPM and the total hours of operation the propeller has accumulated.

a Figure 5-1 applies to an aircraft that is operated in conventional service. "Hours of Operation" refers to the total number of hours the propeller is operated on an engine that has an improper RPM setting. It is not the number of hours the propeller is operated in a restricted range, which will be less than the total hours of operation.

Example:

Minimum propeller idle RPM listed in the AMM is 1180 RPM

Propeller idle is set at 1120 RPM

Propeller has operated with a RPM deviation of **60 RPM**

Engine was rigged 2 months ago and has operated **75 hours** since it was rigged

Figure 5-1 shows that with an RPM deviation of 60 RPM for 75 hours - the propeller assembly must be overhauled and engine rigging corrected before further flight.

Example of a Ground Idle RPM Check Evaluation
Figure 5-2

(3) Corrective Action

(a) The required corrective action is determined by both the amount and duration of RPM deviation.

1 A turboprop propeller with four or more blades may have a variety of operating restrictions and these different restrictions may have different operating margins.

2 The greater the amount of the RPM deviation and the longer it is permitted to exist, the more severe the required corrective action.

3 The corrective action may vary from no action required, to retirement of the blades and the hub.

4 The chart in Figure 5-1 specifies the required corrective action for operation below the minimum idle RPM.

a The chart in Figure 5-1 does not apply to other propeller restrictions that are above the minimum idle RPM.

5 If the corrective action requires a propeller overhaul, overhaul the propeller in accordance with the applicable propeller overhaul manuals.

6 If the corrective action requires that the blades and the hub be retired from service, retire these components in accordance with the Part Retirement Procedures chapter of Hartzell Propeller Standard Practices Manual 202A (61-01-02) before further flight.

a A propeller hub or blade that has been retired from service because of a violation of the operating restrictions as specified in this section must not be reused on another aircraft application.

7 If the corrective action requires the correction of the propeller RPM setting, refer to the applicable installation and rigging instructions for the adjustment of engine torque, engine idle speed, and propeller RPM setting.

(b) Contact the Hartzell Propeller Product Support Department to report the findings, or if a propeller restriction other than those described in Figure 5-1 has been violated.

1 Refer to the section, "Hartzell Propeller Contact Information" in the Introduction chapter of this manual.

C. Post-Run Check

(1) After engine shutdown, check propeller for signs of grease/oil leakage.

D. Propeller Ice Protection System

(1) Refer to the Anti-ice and De-ice Systems chapter in this manual for operational checks and troubleshooting information for Hartzell Propeller ice protection systems.

4. Required Periodic Inspection/Maintenance (Rev. 3)

CAUTION: INSTRUCTIONS AND PROCEDURES IN THIS SECTION MAY INVOLVE PROPELLER CRITICAL PARTS. REFER TO THE INTRODUCTION CHAPTER OF THIS MANUAL FOR INFORMATION ABOUT PROPELLER CRITICAL PARTS. REFER TO THE ILLUSTRATED PARTS LIST CHAPTER OF THE APPLICABLE OVERHAUL MANUAL(S) FOR THE IDENTIFICATION OF SPECIFIC PROPELLER CRITICAL PARTS.

A. Periodic Inspections

(1) Perform the following inspection procedures at 400 hour intervals, not to exceed twelve (12) calendar months. Procedures involved in these inspections are detailed below.

(a) Inspection and maintenance specified by an airframe manufacturer's maintenance program and approved by the applicable airworthiness agency may not coincide with the inspection time intervals specified.

1 In this situation, the airframe manufacturer's schedule may be applied as long as the calendar limit for the inspection interval does not exceed twelve (12) months.

(b) For additional inspection information (including possible corrections), refer to the section, "Inspection Procedures" in this chapter, and/or the Testing and Troubleshooting chapter of this manual.

(2) Remove the spinner dome.

(3) Visually examine the propeller blades (lead edge, trail edge, face, and camber sides) for nicks, gouges, erosion, cracks, etc.

(a) Refer to the section, "Aluminum Blades" in the Maintenance Practices chapter of this manual for damage evaluation and repair information.

(4) Make an entry in the propeller logbook about completion of these inspections.

B. Periodic Maintenance

(1) Lubricate the propeller assembly.

(a) Refer to the section, "Lubrication" in the Maintenance Practices chapter of this manual for intervals and procedures.

C. Compliance Inspections

(1) Blade Inspection for HC-B3TN-3DL/LT10282( )-9.5R Propellers Installed on Piaggio P166 DL3 Aircraft.

CAUTION: ESTABLISH MORE FREQUENT INTERVALS FOR INSPECTION IF SERVICE EXPERIENCE INDICATES THAT SEVERE CORROSION IS FOUND DURING INSPECTIONS.

(a) Visually inspect each blade for paint erosion and corrosion at intervals not exceeding 150 hours of operation,12 calendar months, or at annual inspection, whichever occurs first.

1 For scheduling purposes, the inspection interval has a maximum 10 percent additional non-cumulative flight hour tolerance.

a For example, the initial 150 hour inspection is overflown to 160 hours, and then inspected at this time. The next inspection must be accomplished 140 flight hours from previous inspection.

WARNING: CLEANING AGENTS (ACETONE, #700 LACQUER THINNER, AND MEK), ARE FLAMMABLE AND TOXIC TO THE SKIN, EYES, AND RESPIRATORY TRACT. SKIN AND EYE PROTECTION ARE REQUIRED. AVOID PROLONGED CONTACT. USE IN WELL VENTILATED AREA.

2 Use a cloth dampened with an approved solvent/cleaner to thoroughly clean each blade shank where exposed to engine exhaust and remove all foreign matter/exhaust residue.

3 Paint must be in good condition in the area exposed to exhaust gasses. Repair and repainting is required if:

a Any of the underlying aluminum blade is exposed.

b There are any indications of corrosion, such as pitting or any other unusual conditions.

4 All corrosion indications require repair and subsequent repainting by an appropriately licensed propeller repair facility.

a Refer to FAA Advisory Circular AC 43.4A (or subsequent revision) for additional information concerning corrosion. This circular provides definitions, repair procedures, safety precautions, etc.

(b) If repair and repainting are required, refer to the Blade Repairs section in the Maintenance Practices chapter of this manual for additional information.

NOTE: Qualified personnel must make the determination if repairs can be made locally or must be sent to an appropriately licensed propeller repair facility. Hartzell Propeller recommends that in "borderline" or questionable situations it is preferable to send the propeller to an appropriately licensed propeller repair facility.

(c) Record compliance with this inspection in the propeller logbook.

D. Airworthiness Limitations

(1) Certain components, as well as the entire propeller may have specific life limits established as part of the certification by the FAA. Such limits call for mandatory replacement of specified parts after a defined number of hours and/or cycles of use.

(2) Life limited component times may exist for the propeller models covered in this manual. Refer to the Airworthiness Limitations chapter of this manual.

(4) Operators are urged to keep informed of airworthiness information via Hartzell Propeller Service Bulletins and Service Letters, which are available from Hartzell distributors or from Hartzell by subscription. Selected information is also available on Hartzell Propeller's website at www.hartzellprop.com.

E. Overhaul Periods

(1) In flight, the propeller is constantly subjected to vibration from the engine and the airstream, as well as high centrifugal forces.

(2) The propeller is also subject to corrosion, wear, and general deterioration due to aging. Under these conditions, metal fatigue or mechanical failures can occur.

(3) To protect your safety, your investment, and to maximize the safe operating lifetime of your propeller, it is essential that a propeller be properly maintained and overhauled according to the recommended service procedures.

(a) For Hartzell propeller overhaul periods, refer to Hartzell Propeller Service Letter HC-SL-61-61Y.

(Blank Page)

5. Inspection Procedures

A. Blade Damage (Rev. 1)

(1) Refer to the section, "Aluminum Blades" in the Maintenance Practices chapter of this manual for damage evaluation and repair information.

B. Grease/Oil Leakage (Rev. 2)

WARNING: UNUSUAL OR ABNORMAL GREASE LEAKAGE OR VIBRATION, WHERE THE CONDITION STARTED SUDDENLY, CAN BE AN INDICATION OF A FAILING PROPELLER BLADE OR BLADE RETENTION COMPONENT. AN IN FLIGHT BLADE SEPARATION CAN RESULT IN DEATH, SERIOUS BODILY INJURY, AND/OR SUBSTANTIAL PROPERTY DAMAGE. UNUSUAL OR ABNORMAL GREASE LEAKAGE OR VIBRATION DEMANDS IMMEDIATE INSPECTION.

(1) Important Information

(a) A new or newly overhauled propeller may leak slightly during the first several hours of operation. This leakage may be caused by the seating of seals and O-rings, and the slinging of lubricants used during assembly. Such leakage should cease within the first ten hours of operation.

(b) Leakage that persists beyond the first ten hours of operation on a new or newly overhauled propeller, or occurs on a propeller that has been in service for some time will require repair.

1 A determination should be made as to the source of the leak. If the source of the leak is the O-ring seal between the engine and the propeller flange or a lubrication fitting, field repair is permitted.

2 All other leakage repairs should be referred to a certified propeller repair station with the appropriate rating.

3 If abnormal leakage is detected, inspect the propeller assembly using the Inspection procedure steps in this section.

(c) Grease Leakage - probable causes:

1 Loose/defective lubrication fitting

2 Grease leaks between the blade clamp and the propeller hub

a Refer to a certified propeller repair station with the appropriate rating.

3 Grease leaks past the blade clamp seal gaskets

4 Grease leaks from between the blade clamp and the blade

a Refer to a certified propeller repair station with the appropriate rating.

5 Grease leaks from the clamp when the blade is pointed up and in a static position.

a Oil separating from the grease. Approved lubricants are listed in the Maintenance Practices chapter of this manual. These lubricants have varying separation rates.

1 If a clamp seal leaks after the first ten hours of operation, consult a certified propeller repair station with the appropriate rating.

(d) Oil Leakage - probable causes:

1 Faulty O-ring seal between the hub and the cylinder

2 Faulty O-ring seal between the piston and the cylinder

3 Displaced felt seal between the piston and the cylinder

4 Faulty O-ring(s) between the propeller hub and the engine flange

5 Faulty O-ring between the piston and the pitch change rod

(e) Beta Tube/Valve System Oil Leakage (if applicable) - probable causes:

1 Faulty O-rings between the beta tube/valve.

a Refer to a certified propeller repair station with the appropriate rating for replacement.

(2) Inspection Procedure

(a) Remove the spinner dome.

CAUTION: PERFORM A VISUAL INSPECTION WITHOUT CLEANING THE PARTS. A TIGHT CRACK IS OFTEN EVIDENT DUE TO TRACES OF GREASE EMANATING FROM THE CRACK. CLEANING CAN REMOVE SUCH EVIDENCE AND MAKE A CRACK VIRTUALLY IMPOSSIBLE TO SEE.

(b) Perform a visual inspection of the hub, blade clamps, and blades to locate the source of the grease leak.

1 If the source of the grease leak is a non-critical part such as an O-ring, gasket, or sealant, repairs can be accomplished during scheduled maintenance as long as flight safety is not compromised.

2 If cracks are suspected, additional inspections to verify the condition must be performed before further flight.

a Inspections typically include disassembly of the propeller followed by inspection of parts, using nondestructive methods in accordance with published procedures.

(1) These inspections must be performed by a certified propeller repair station with the appropriate rating.

(c) If cracks or failing components are found, these parts must be replaced before further flight.

1 Report such occurrences to the appropriate airworthiness authorities and to Hartzell Propeller Product Support Department.

C. Vibration (Rev. 2)

NOTE: Vibration may originate in the engine, propeller, or airframe. Troubleshooting procedures typically begin with an investigation of the engine. Airframe components, such as engine mounts or loose landing gear doors, can also be the source of vibration. When investigating an abnormal vibration, the blades and the blade retention components should be considered as potential sources of the vibration.

(1) Important Information

(a) Instances of abnormal vibration should be investigated immediately. If the cause of the vibration is not readily apparent, examine the propeller in accordance with the instructions in this section.

(b) Perform troubleshooting and evaluation of possible sources of vibration in accordance with engine or airframe manufacturer's instructions.

(c) Refer to the section, "Vibration" in the Testing and Troubleshooting chapter of this manual.

1 Perform the checks to determine possible cause of the vibration.

a If no cause is found, the propeller could be the source of the vibration. Examine the propeller in accordance with the Inspection steps in this section.

(2) Inspection

(a) Remove the spinner dome.

(b) Visually examine the hub, blades, and blade clamps (if applicable) for cracks.

1 Pay particular attention to the blade retention areas of an aluminum hub, or the blade clamps on steel hub propellers.

2 A crack may be readily visible, or may be indicated by grease leaking from a seemingly solid surface.

(c) If cracks are suspected, additional inspections must be performed to evaluate the condition before further flight.

1 These inspections typically include disassembly of the propeller, followed by inspection of parts, using nondestructive methods in accordance with published procedures.

2 These inspections must be performed at a certified propeller repair station with the appropriate rating.

(d) Inspect the movement of the propeller blades in accordance with the section, "Blade Tolerances" in this chapter.

(e) Inspect blade track in accordance with the section, "Blade Track" in this chapter.

CAUTION: DO NOT USE BLADE PADDLES TO TURN BLADES.

1 Manually (by hand) attempt to turn the blades (change pitch).

2 Visually check for damaged blades.

(f) If abnormal blade conditions or damage are found, additional inspections must be performed to evaluate the condition before further flight.

1 These inspections must be performed at a certified propeller repair station with the appropriate rating.

(g) If cracks or failing components are found, these parts must be replaced before further flight.

1 Report such occurrences to airworthiness authorities and Hartzell Propeller Product Support.

D. Blade Track

(1) On -2 and -5 propeller models only, check the blade track as follows:

(a) Chock the aircraft wheels securely.

(b) Refer to Figure 5-1. Place a fixed reference point beneath the propeller, within 0.25 inch (6.4 mm) of the lowest point of the propeller arc.

NOTE: This reference point may be a flat board with a sheet of paper attached to it. The board may then be blocked up to within 0.25 inch (6.4 mm) of the propeller arc.

(c) Rotate the propeller by hand in the direction of normal rotation until a blade points directly at the paper. Mark the position of the blade tip in relation to the paper.

(d) Repeat this procedure with the remaining blades.

(e) Tracking tolerance is ±0.0625 inch (1.58 mm) or 0.125 inch (3.17 mm) total.

(2) On -3 and -7 propeller models only, the propeller must be removed from the aircraft to check the blade track on a rotatable fixture, in accordance with the applicable Hartzell Propeller Overhaul Manual 118F (61-10-18) or Manual 132A (61-10-32).

(3) Possible Correction

(a) Remove any foreign matter from the propeller mounting flange.

(b) If no foreign matter is present, refer to an appropriately licensed propeller repair facility.

E. Blade Tolerances (Rev. 4)

(1) Limits for blade play are specified below. Refer to Figure 5-3.

(a) End Play

1	Leading Edge-to-Trailing Edge	±0.0625 inch (1.58 mm) Total: 0.125 inch (3.17 mm)
2	Fore-to-Aft (face-to-camber)	±0.0625 inch (1.58 mm) Total: 0.125 inch (3.17 mm)

(b) In-and-Out Play — 0.032 inch (0.81 mm)

(c) Radial Play (pitch change) — ±0.5 degree (Total: 1 degree) measured at reference station

(d) Blades should be tight in the propeller; however, play that is within the allowable limits is acceptable if the blade returns to its original position when released.

1 If blade play is greater than the allowable limits, or if the blade(s) do not return to their original position when released, there may be internal wear or damage that should be referred to a certified propeller repair station with the appropriate rating.

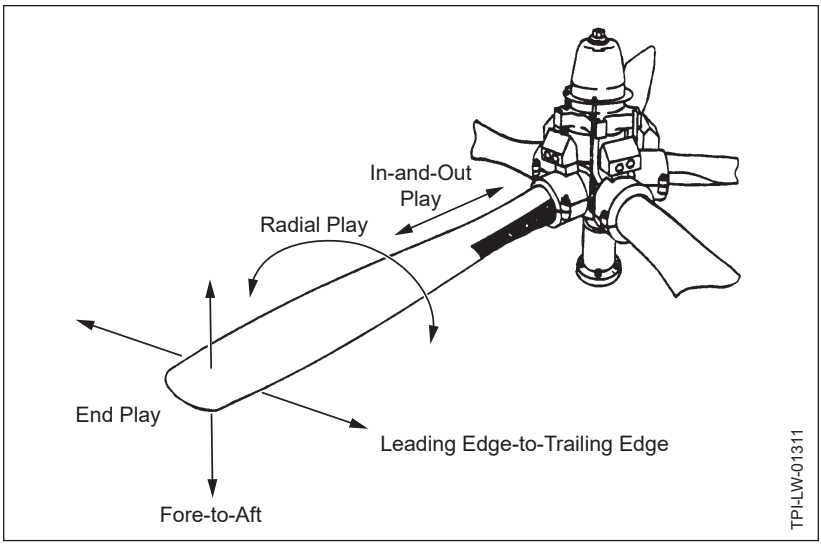

Blade Play
Figure 5-3

F. Corrosion (Rev. 1)

WARNING: REWORK THAT INVOLVES COLD WORKING THE METAL, RESULTING IN CONCEALMENT OF A DAMAGED AREA IS NOT PERMITTED.

(1) Corrosion of any type on the hub or heavy corrosion on other parts that results in severe pitting must be referred to a certified propeller repair station with the appropriate rating.

G. Spinner Damage (Rev. 3)

(1) Inspect the spinner for cracks, missing hardware, or other damage.

(a) Metal Spinners

1 For damage evaluation and repair information, refer to Hartzell Propeller Metal Spinner Maintenance Manual 127 (61-16-27) or a certified propeller repair station with the appropriate rating.

2 Contact the local airworthiness authority for repair approval.

(b) Composite Spinners

1 For damage evaluation and repair information, refer to Hartzell Propeller Composite Spinner Maintenance Manual 148 (61-16-48) or a certified propeller repair station with the appropriate rating.

2 Contact the local airworthiness authority for repair approval.

H. Propeller Ice Protection Systems (Rev. 1)

(1) Refer to the Anti-ice and De-ice Systems chapter of this manual for operational checks and troubleshooting information.

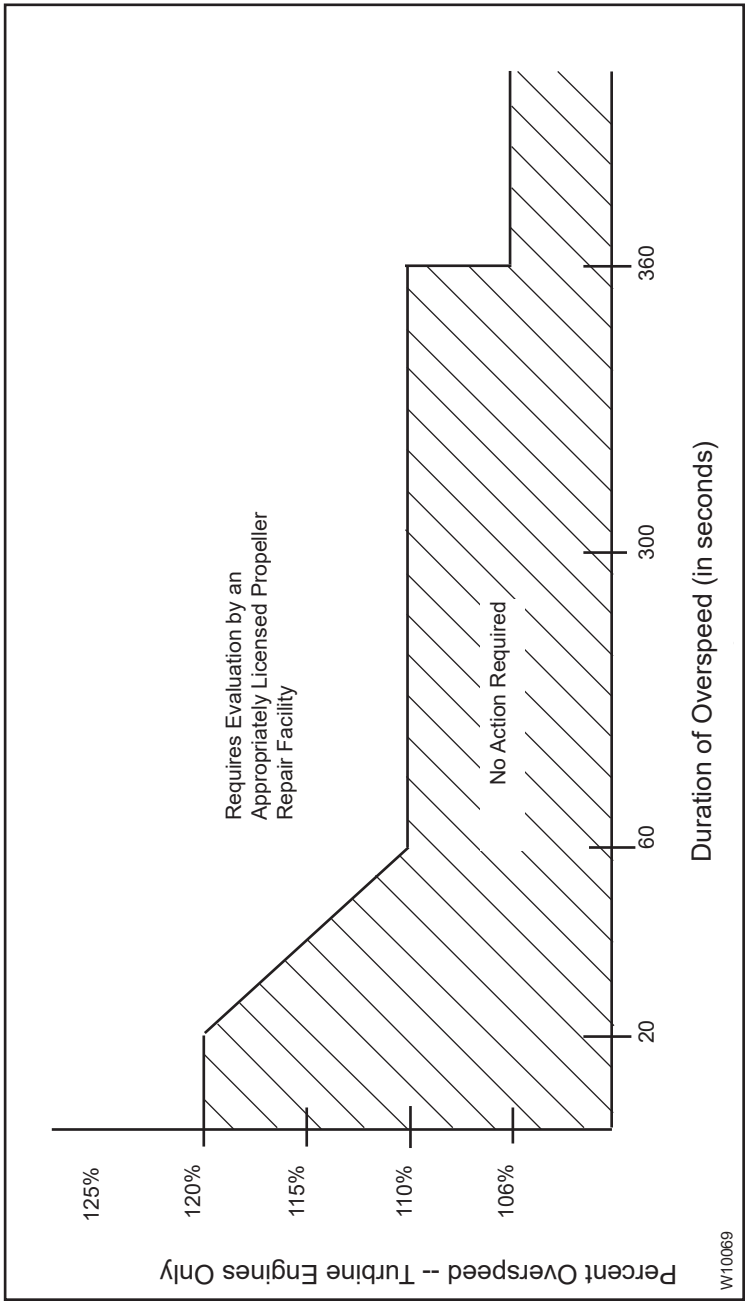

Turbine Engine Overspeed Limits
Figure 5-4

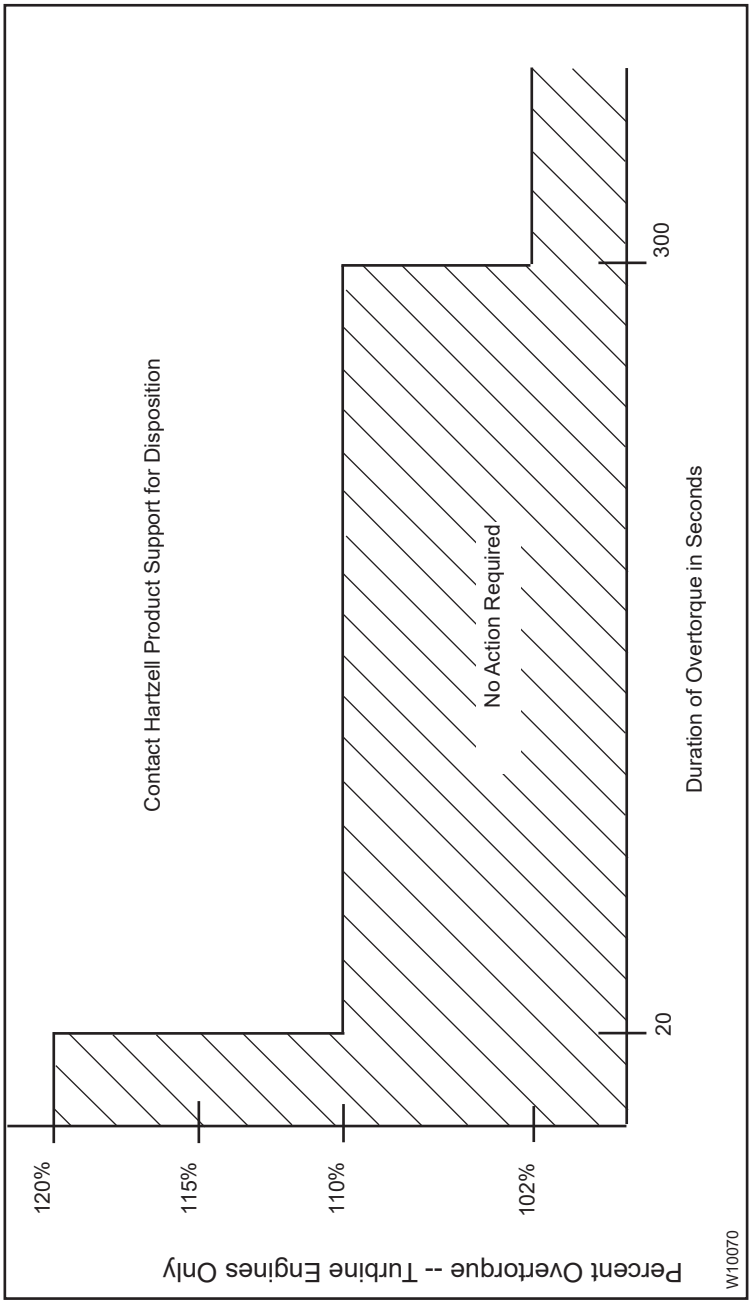

Turbine Engine Overtorque Limits
Figure 5-5

6. Special Inspections

CAUTION: INSTRUCTIONS AND PROCEDURES IN THIS SECTION MAY INVOLVE CRITICAL PARTS. REFER TO THE INTRODUCTION CHAPTER OF THIS MANUAL FOR INFORMATION ABOUT PROPELLER CRITICAL PARTS. REFER TO THE ILLUSTRATED PARTS LIST CHAPTER OF THE APPLICABLE OVERHAUL MANUAL(S) FOR THE IDENTIFICATION OF SPECIFIC PROPELLER CRITICAL PARTS.

A. Overspeed/Overtorque (Rev. 2)

(1) An overspeed has occurred when the propeller RPM has exceeded the maximum RPM stated in the applicable Aircraft Type Certificate Data Sheet. An overtorque condition occurs when the engine load exceeds the limits established by the engine, propeller, or airframe manufacturer. The duration of time at overspeed/overtorque for a single event determines the corrective action that must be taken to make sure no damage to the propeller has occurred.

(2) The criteria for determining the required action after an overspeed are based on many factors. The additional centrifugal forces that occur during overspeed are not the only concern. Some applications have sharp increases in vibratory stresses at RPMs above the maximum rated for the airframe/engine/propeller combination.

(a) When a propeller installed on a turbine engine has an overspeed event, refer to the Turbine Engine Overspeed Limits (Figure 5-4) to determine the corrective action to be taken.

(b) When a propeller installed on a turbine engine has an overtorque event, refer to the Turbine Engine Overtorque Limits (Figure 5-5) to determine the corrective action to be taken.

(c) Make a record of the overspeed/overtorque event in the propeller logbook, indicating any corrective action(s) taken.

NOTE: Some aircraft installations have torque indicator values indicating 100% torque that are less than the maximum certified torque for the specific propeller model as listed in the propeller type certificate data sheet. If an overtorque occurs that requires propeller repair station evaluation, contact the Hartzell Propeller Product Support Department to confirm actual overtorque percentage.

B. Lightning Strike (Rev. 1)

CAUTION: ALSO CONSULT ENGINE AND AIRFRAME MANUFACTURER'S MANUALS FOR ADDITIONAL INSPECTIONS TO PERFORM AFTER A PROPELLER LIGHTNING STRIKE.

(1) General

(a) In the event of a propeller lightning strike, an inspection is required before further flight.

(b) If the propeller meets the requirements of the "Temporary Operation Inspection" in this section, 10 hours of operation is permitted before propeller disassembly/inspection must be performed.

(2) Temporary Operation Inspection

(a) Remove the spinner dome and perform a visual inspection of the propeller, blades, spinner, and ice protection system for evidence of damage that would require repair before flight (such as broken wires or arcing damage to propeller hub).

CAUTION: IF THE PROPELLER EXPERIENCES A LIGHTNING STRIKE, REFER TO THE SECTION, "ALUMINUM BLADES" IN THE MAINTENANCE PRACTICES CHAPTER OF THIS MANUAL TO EVALUATE THE DAMAGE BEFORE FURTHER FLIGHT.

1. If the only evident damage is minor arcing burns to the blades, temporary operation for up to 10 flight hours is permitted before propeller disassembly and inspection.
2. If there is evidence of additional damage, beyond minor arcing burns to the blades, temporary operation is not permitted. The propeller must be removed from the aircraft, disassembled, evaluated, and/or repaired by a certified propeller repair station with the appropriate rating before further flight.

(b) Perform an operational check of the propeller ice protection system (if installed) in accordance with the Anti-ice and De-ice Systems chapter of this manual.

(c) Make a record of the lightning strike in the propeller logbook, indicating any corrective action(s) taken.

(3) For flight beyond the 10-hour temporary operation limit:

(a) The propeller must be removed from the aircraft, disassembled, evaluated, and/or repaired by a certified propeller repair station with the appropriate rating.

C. Foreign Object Strike/Ground Strike (Rev. 3)

(1) General

(a) A foreign object/ground strike can include a broad spectrum of damage, from a minor stone nick to severe ground impact damage.

1 A conservative approach in evaluating the damage is required because there may be hidden damage that is not readily apparent during an on-wing, visual inspection.

(b) A foreign object/ground strike is defined as:

1 Any incident, whether or not the engine is operating, that requires repair to the propeller other than minor dressing of the blades.

a Examples of foreign object/ground strike include situations where an aircraft is stationary and the landing gear collapses causing one or more blades to be significantly damaged, or where a hangar door (or other object) strikes the propeller blade(s).

b These cases should be handled as foreign object/ground strikes because of potentially severe side loading on the propeller hub, blades, and retention bearings.

2 Any incident during engine operation in which the propeller impacts a solid object that causes a drop in revolutions per minute (RPM) and also requires structural repair of the propeller (incidents requiring only paint touch-up are not included). This is not restricted to propeller strikes against the ground.

3 A sudden RPM drop while impacting water, tall grass, or similar yielding medium, where propeller blade damage is not normally incurred.

(c) In the event of a foreign object/ground strike, an inspection is required before further flight.

(2) Inspection Procedure

(a) Examine the propeller assembly for damage related to the foreign object/ground strike.

(b) If any of the following indications are found, the propeller must be removed from the aircraft, disassembled and overhauled by a certified propeller repair station with the appropriate rating.

1 Blade(s) damaged, bent, or out of track/angle

2 Blade(s) loose in the hub (if applicable)

a Refer to the section, "Blade Tolerances" in this chapter for the permitted limits of blade movement.

3 Blade(s) rotated in the clamp (if applicable)

4 Any noticeable or **suspected** damage to the pitch change mechanism

5 Any blade diameter reduction

6 A bent, cracked, or failed engine shaft

7 Vibration during operation (that was not present before the event)

(c) Aluminum Blades: Nicks, gouges, and scratches on blade surfaces or the leading and trailing edges must be removed before flight.

1 Refer to the section, "Aluminum Blades" in the Maintenance Practices chapter of this manual (if applicable) for damage evaluation and repair information.

(d) Engine mounted components - such as governors, pumps, etc. may be damaged by a foreign object strike, especially if the strike resulted in a sudden stoppage of the engine.

1 These components should be inspected and repaired in accordance with the applicable component maintenance manual.

(e) Make a record of the foreign object/ground strike event in the propeller logbook, indicating any corrective action(s) taken.

D. Fire/Heat Damage (Rev. 1)

WARNING: HIGH TEMPERATURES CAN CAUSE SERIOUS DAMAGE TO PROPELLER HUBS, CLAMPS, AND BLADES (ALUMINUM AND COMPOSITE). THIS DAMAGE CAN RESULT IN CATASTROPHIC FAILURE CAUSING DEATH, SERIOUS BODILY INJURY, AND/OR SUBSTANTIAL PROPERTY DAMAGE.

(1) A propeller that has been exposed to fire or high temperatures, such as an engine or hangar fire, must be inspected by a certified propeller repair station with the appropriate rating before further flight.

E. Sudden Stoppage (Rev. 1)

(1) When there is a propeller sudden stoppage because of catastrophic engine failure or seizure, the propeller and any engine driven/powered accessory must be inspected and repaired in accordance with the applicable component maintenance manual.

(2) If the sudden stoppage was caused by a foreign object strike, refer to the section, "Foreign Object/Ground Strike" in this chapter.

F. Engine Oil Contamination (Rev. 1)

(1) Following an incident of oil contamination, the components of the propeller that were exposed to oil contamination must be removed, cleaned, and inspected.

(a) A propeller that was exposed to oil contamination must be removed and sent to a certified propeller repair station with the appropriate rating for disassembly, cleaning, and inspection.

(b) A governor that was exposed to oil contamination must be inspected and repaired in accordance with the applicable component maintenance manual.

7. Long Term Storage (Rev. 1)

   A. Important Information

      (1) Parts shipped from Hartzell Propeller are not shipped or packaged in a container that is designed for long term storage.

      (2) Long term storage procedures are detailed in Hartzell Propeller Standard Practices Manual 202A (61-01-02).

      (3) Information regarding the return of a propeller assembly to service after long term storage is detailed in Hartzell Propeller Standard Practices Manual 202A (61-01-02).

MAINTENANCE PRACTICES - CONTENTS

MAINTENANCE PRACTICES - CONTENTS, CONTINUED

LIST OF FIGURES

LIST OF TABLES

1. Cleaning (Rev. 2)

CAUTION 1: INSTRUCTIONS AND PROCEDURES IN THIS SECTION MAY INVOLVE PROPELLER CRITICAL PARTS. REFER TO THE INTRODUCTION CHAPTER OF THIS MANUAL FOR INFORMATION ABOUT PROPELLER CRITICAL PARTS. REFER TO THE ILLUSTRATED PARTS LIST CHAPTER OF THE APPLICABLE OVERHAUL MANUAL(S) FOR THE IDENTIFICATION OF SPECIFIC PROPELLER CRITICAL PARTS.

CAUTION 2: BEFORE CLEANING THE PROPELLER, BE SURE THE PROPELLER HAS BEEN INSPECTED IN ACCORDANCE WITH THE REQUIRED PERIODIC INSPECTIONS SPECIFIED IN THIS MANUAL. CLEANING THE PROPELLER PRIOR TO INSPECTION MAY REMOVE EVIDENCE OF A CONDITION THAT REQUIRES CORRECTIVE ACTION.

CAUTION 3: DO NOT USE PRESSURE WASHING EQUIPMENT TO CLEAN THE PROPELLER OR CONTROL COMPONENTS. PRESSURE WASHING CAN FORCE WATER AND/OR CLEANING SOLVENTS PAST SEALS, AND CAN LEAD TO INTERNAL CORROSION OF PROPELLER COMPONENTS.

A. General Cleaning

CAUTION 1: WHEN CLEANING THE PROPELLER, DO NOT ALLOW SOAP OR SOLVENT SOLUTIONS TO RUN OR SPLASH INTO THE HUB AREA.

CAUTION 2: DO NOT CLEAN THE PROPELLER WITH CAUSTIC OR ACIDIC SOAP SOLUTIONS. IRREPARABLE CORROSION OF PROPELLER COMPONENTS MAY OCCUR.

(1) Remove the spinner dome in accordance with the Installation and Removal chapter in this manual.

WARNING: ADHESIVES AND SOLVENTS ARE FLAMMABLE AND TOXIC TO THE SKIN, EYES AND RESPIRATORY TRACT. SKIN AND EYE PROTECTION ARE REQUIRED. AVOID PROLONGED CONTACT. USE IN WELL VENTILATED AREA.

CAUTION: DO NOT USE ANY SOLVENT DURING CLEANING THAT COULD SOFTEN OR DESTROY THE BOND BETWEEN CHEMICALLY ATTACHED PARTS.

(2) Using a clean cloth dampened with Stoddard solvent CM23 or equivalent, wipe the inside of the spinner dome to remove grease, oil, and other residue.

(a) Immediately dry the inside of the spinner dome using a clean dry cloth.

(3) Using a clean cloth dampened with Stoddard solvent CM23 or equivalent, wipe the accessible surfaces of the hub, counterweight clamps, slip ring, and bulkhead to remove grease, oil, and other residue.

(4) Fill a tank sprayer with a non-caustic/non-acidic soap solution.

IMPORTANT: WHEN PERFORMING STEPS 5 THRU 7, THE BLADE(S) TO BE CLEANED MUST POINT DOWNWARD. THIS WILL PREVENT THE SOAP SOLUTION AND/OR CONTAMINANTS FROM FLOWING INTO THE HUB/BLADE SEAL AREA.

CAUTION: DO NOT LET THE SOAP SOLUTION DRY ON THE SURFACES OF THE HUB, BULKHEAD, OR SLIP RING.

(5) Using the tank sprayer, apply a fine mist of the soap solution to the surfaces of the downward facing blades, and the hub, bulkhead, and slip ring around the downward facing blades.

(a) Use a cloth or soft nylon brush to loosen dirt and unwanted material on the surfaces where the soap solution was applied, particularly on the inboard surface of the counterweight clamp.

(6) Using clean potable water at low pressure, rinse the surfaces where the soap solution was applied to remove dirt, unwanted material, and soap residue.

(7) Use a clean dry cloth to dry the surfaces cleaned in the previous steps.

(8) Rotate the propeller so that the next blade(s) to be cleaned are pointing downward, then repeat steps 5 thru 7.

(a) Repeat steps 5 thru 8 until all blades have been cleaned and dried.

(9) Let the propeller dry.

(10) Install the spinner dome in accordance with the Installation and Removal chapter in this manual.

B. Spinner Cleaning and Polishing

(1) Clean the spinner using the General Cleaning procedures in this section.

(2) If an aluminum spinner dome is installed, polish the dome (if required) with an automotive-type aluminum polish.

2. Lubrication (Rev. 6)

CAUTION: INSTRUCTIONS AND PROCEDURES IN THIS SECTION MAY INVOLVE PROPELLER CRITICAL PARTS. REFER TO THE INTRODUCTION CHAPTER OF THIS MANUAL FOR INFORMATION ABOUT PROPELLER CRITICAL PARTS. REFER TO THE ILLUSTRATED PARTS LIST CHAPTER OF THE APPLICABLE OVERHAUL MANUAL(S) FOR THE IDENTIFICATION OF SPECIFIC PROPELLER CRITICAL PARTS.

A. Lubrication Intervals

(1) The propeller is to be lubricated at intervals not to exceed 400 hours or at 12 calendar months, whichever occurs first.

(a) Inspection and maintenance specified by an airframe manufacturer's maintenance program and approved by the applicable airworthiness agency may not coincide with the lubrication interval specified.

1 In this situation, the airframe manufacturer's schedule may be applied as long as the calendar limit for the lubrication interval does not exceed twelve (12) months.

(b) If the aircraft is operated or stored under adverse atmospheric conditions, e.g., high humidity, salt air, calendar lubrication intervals should be reduced to six months.

(c) If the propeller is leaking grease, the lubrication interval should be reduced to 100 hours until the grease leak issue is resolved.

(2) Owners of high use aircraft may wish to extend their lubrication intervals. The lubrication interval may be gradually extended after evaluating bearing wear and internal corrosion when the propeller is overhauled.

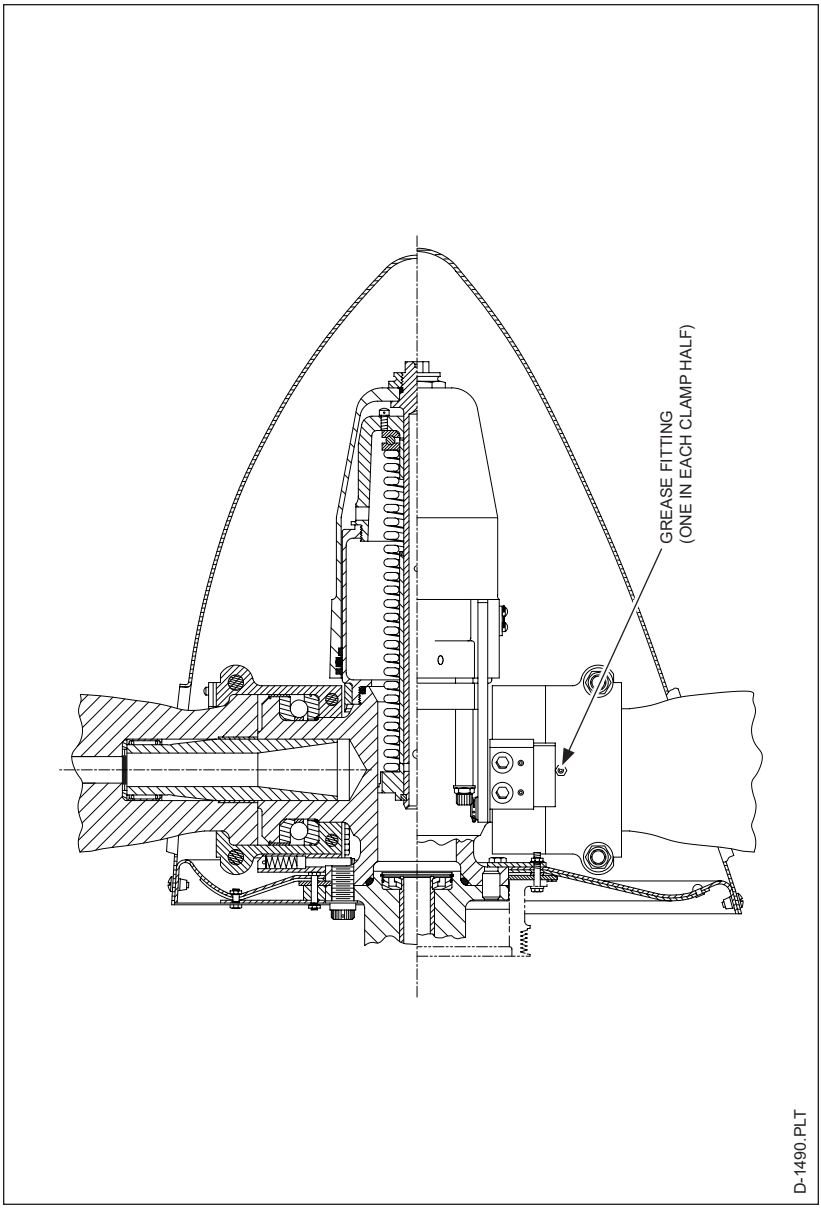

Grease Fitting
Figure 6-1

(3) Hartzell Propeller recommends that new or newly overhauled propellers be lubricated after approximately the first 10 hours of operation because centrifugal loads will pack and redistribute grease which can result in a propeller imbalance. Redistribution of grease may also result in voids in the blade bearing area where moisture can collect.

(a) Purchasers of new aircraft should check the propeller logbook to verify whether the propeller was lubricated by the manufacturer during flight testing. If it was not lubricated, the propeller should be serviced at the earliest convenience.

B. Lubrication Procedure

WARNING: FOLLOW LUBRICATION PROCEDURES CORRECTLY TO MAINTAIN ACCURATE BALANCE OF THE PROPELLER ASSEMBLY.

(1) Remove the propeller spinner.

CAUTION: STEEL BLADE CLAMPS PRODUCED BEFORE 1967 MAY HAVE ONLY ONE LUBRICATION FITTING. DO NOT REMOVE THIS FITTING WHEN SERVICING.

(2) Remove the outboard lubrication fitting from the blade clamp, and the cap from the inboard lubrication fitting. Refer to Figure 6-1.

CAUTION: USE CARE NOT TO DAMAGE THE THREADED HOLE WHEN REMOVING A BLOCKAGE.

(3) If there is blockage in the threaded hole where the lubrication fitting was removed (ex. hardened grease), bend a piece of safety wire and use the bent end to loosen the blockage.

CAUTION: USE ONLY HARTZELL PROPELLER PROPELLER APPROVED GREASE. DO NOT MIX DIFFERENT SPECIFICATIONS AND/OR BRANDS OF GREASE EXCEPT AS NOTED IN THIS SECTION.

(4) A label is normally applied to the propeller to indicate the type of grease previously used. Refer to Figure 6-2.

(a) The same grease type should be used during re-lubrication unless the propeller has been disassembled and the old grease removed.

1 It is not possible to purge old grease through lubrication fittings.

2 To completely replace one grease with another, the propeller must be disassembled and cleaned in accordance with the applicable overhaul manual.

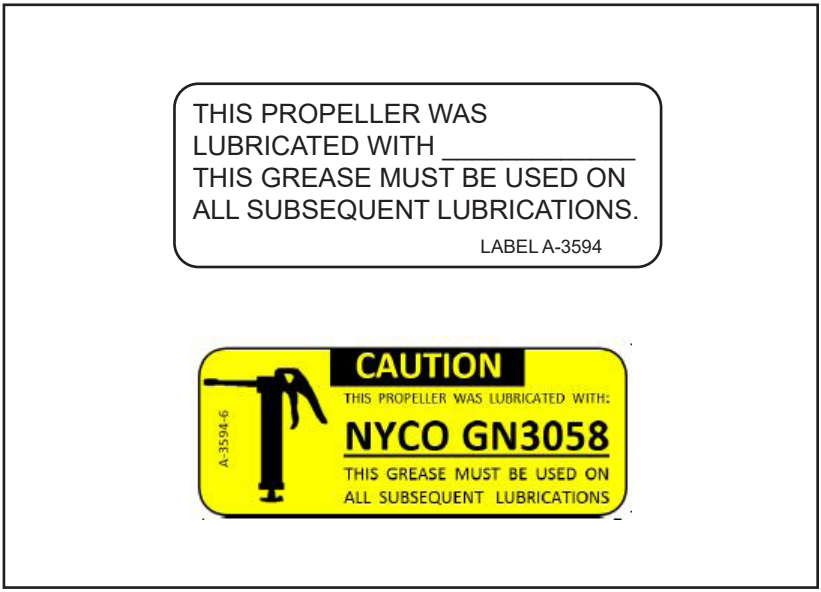

Lubrication Label
Figure 6-2

(5) If different grease types are accidentally mixed, the propeller must be disassembled and cleaned in accordance with the applicable overhaul/maintenance manual within three months or 30 flights whichever occurs first.

(a) EXCEPTION: Aeroshell 5 and Aeroshell 6 greases both have a mineral oil base and the same thickening agent; therefore, mixing of these two greases is permitted in Hartzell propellers.

WARNING: WHEN MIXING AEROSHELL 5 AND AEROSHELL 6 GREASES, THE AIRCRAFT MUST BE PLACARDED TO INDICATE THAT FLIGHT IS PROHIBITED IF THE OUTSIDE AIR TEMPERATURE IS LESS THAN -40° F (-40° C). AEROSHELL 5 GREASE MUST BE INDICATED ON THE LABEL.

CAUTION 1: IF A PNEUMATIC GREASE GUN IS USED, EXTRA CARE MUST BE TAKEN TO AVOID EXCESSIVE PRESSURE BUILDUP.

CAUTION 2: GREASE MUST BE APPLIED TO ALL BLADES OF A PROPELLER ASSEMBLY AT THE TIME OF LUBRICATION.

CAUTION 3: DO NOT ATTEMPT TO PUMP MORE THAN 1 FL. OZ. (30 ML) OF GREASE INTO THE LUBRICATION FITTING. USING MORE THAN 1 FL. OZ. (30 ML) OF GREASE COULD RESULT IN OVER SERVICING OF THE PROPELLER. VERIFY THE OUTPUT OF THE GREASE GUN BEFORE SERVICING THE PROPELLER.

CAUTION 4: OVER LUBRICATING A STEEL HUB PROPELLER MAY CAUSE THE GREASE TO DISLODGE THE CLAMP GASKET OR SEAL, LEADING TO A POTENTIAL GREASE LEAK. THE CLAMP MUST THEN BE DISASSEMBLED TO REMOVE THE SEAL OR CLAMP GASKET.

(6) Apply grease in accordance with the applicable step below.

(a) For blade clamps with two lubrication fittings:

1 Pump a maximum of 1 fl. oz. (30 ml) grease into the inboard lubrication fitting or until grease emerges from the hole where the lubrication fitting was removed, whichever occurs first.

a Repeat for each blade clamp assembly.

(b) For blade clamps with only one lubrication fitting:

1 Without using excessive pressure, slowly pump a maximum of 1 fl. oz. (30 ml) grease into the lubrication fitting.

a If there is too much pressure, loosen the lubrication fitting used to add the grease, then tighten the fitting until snug.

b Repeat for each blade clamp assembly.

(7) Reinstall the lubrication fittings on each blade clamp that were removed at the beginning of this procedure.

(8) Tighten the lubrication fittings until snug.

(a) Make sure the ball of each lubrication fitting is properly seated.

(9) Reinstall a lubrication fitting cap on each lubrication fitting.

C. Approved Lubricants

(1) For a list of lubricants approved for use in Hartzell propellers, refer to the Consumable Materials chapter of Hartzell Propeller Standard Practices Manual 202A (61-01-02).

3. Corrosion Inhibitor (Rev. 2)

CAUTION: INSTRUCTIONS AND PROCEDURES IN THIS SECTION MAY INVOLVE PROPELLER CRITICAL PARTS. REFER TO THE INTRODUCTION CHAPTER OF THIS MANUAL FOR INFORMATION ABOUT PROPELLER CRITICAL PARTS. REFER TO THE ILLUSTRATED PARTS LIST CHAPTER OF THE APPLICABLE OVERHAUL MANUAL(S) FOR THE IDENTIFICATION OF SPECIFIC PROPELLER CRITICAL PARTS.

A. Application Intervals

(1) The bolt-on, steel counterweights on propellers manufactured after the release date of Service Letter HC-SL-61-364 dated April 3, 2020 will be coated with corrosion inhibitor CM352 by Hartzell Propeller during the assembly process.

(a) Corrosion inhibitor CM352 is applied to prevent corrosion on the counterweight.

(b) Periodic re-application of the corrosion inhibitor CM352 will provide extended protection from corrosion.

1 Hartzell Propeller recommends re-application of the corrosion inhibitor CM352 at regularly scheduled intervals, similar to the lubrication interval specified in this propeller owner's manual.

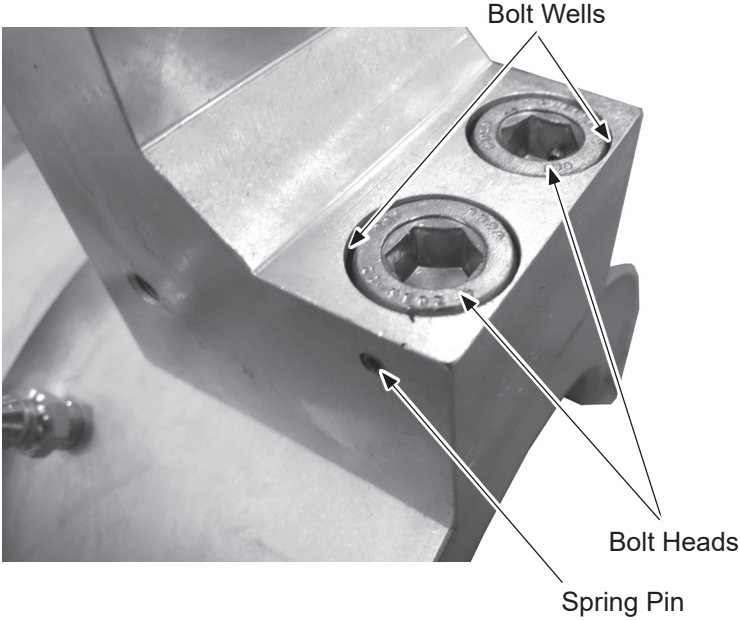

NOTE: Non-painted clamp unit is shown.

TPI-LW-202A-VOL-5-00402

Applying Corrosion Inhibitor CM352
Figure 6-3

B. Application Procedure

(1) Remove the spinner dome in accordance with the Installation and Removal chapter of this manual.

CAUTION: DO NOT APPLY CORROSION INHIBITOR CM352 ONTO ICE PROTECTION SYSTEM COMPONENTS (TERMINAL STRIPS, BOOTS, HARNESSES, ETC.).

(2) Spray the corrosion inhibitor CM352 into a cup or container, then use a soft bristled brush to apply the corrosion inhibitor CM352 to the bolt heads, spring pins, and bolt wells of the counterweight. Refer to Figure 6-3.

(a) Use caution when applying the corrosion inhibitor CM352 around ice protection system components (terminal strips, boots, harnesses, etc.).

(b) Make sure the bolt heads, spring pins, and bolt wells are completely covered by the corrosion inhibitor CM352.

(c) Optionally, corrosion inhibitor CM352 can be applied to all exposed surfaces of the counterweight.

(3) Let the corrosion inhibitor CM352 cure for a minimum of three hours before flight.

4. Beta Feedback Block Assemblies (Rev. 1)

CAUTION: INSTRUCTIONS AND PROCEDURES IN THIS SECTION MAY INVOLVE PROPELLER CRITICAL PARTS. REFER TO THE INTRODUCTION CHAPTER OF THIS MANUAL FOR INFORMATION ABOUT PROPELLER CRITICAL PARTS. REFER TO THE ILLUSTRATED PARTS LIST CHAPTER OF THE APPLICABLE OVERHAUL MANUAL(S) FOR THE IDENTIFICATION OF SPECIFIC PROPELLER CRITICAL PARTS.

A. Inspection

(1) The clearance between the yoke pin and the corresponding linkage (beta lever bushing) can become too close due to a buildup of plating and foreign particles between the two pieces. This can cause a binding action, resulting in excessive wear to the carbon block unit, low stop collar, beta ring, and/or beta linkage.

(2) Inspect the beta lever and beta feedback block assembly interface for free movement. If there is binding, do the following:

(a) Disconnect the beta linkage and remove the beta feedback block assemblies from the beta ring.

(b) Using an abrasive pad, lightly polish the yoke pin to provide adequate clearance and eliminate binding.

(c) Reinstall the beta feedback block assembly into the beta ring.

(d) Install, adjust, and safety the beta linkage in accordance with the airframe manufacturer's instructions.

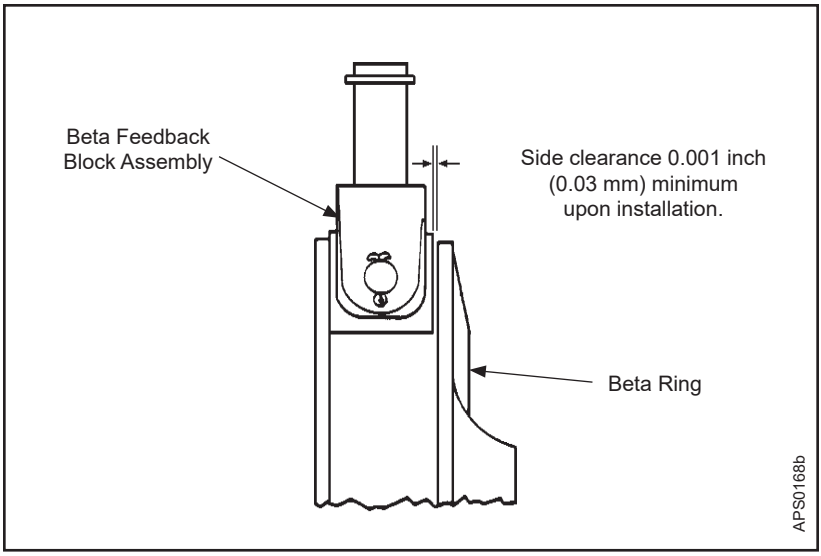

Beta Feedback Block Assembly and Beta Ring Clearance
Figure 6-4

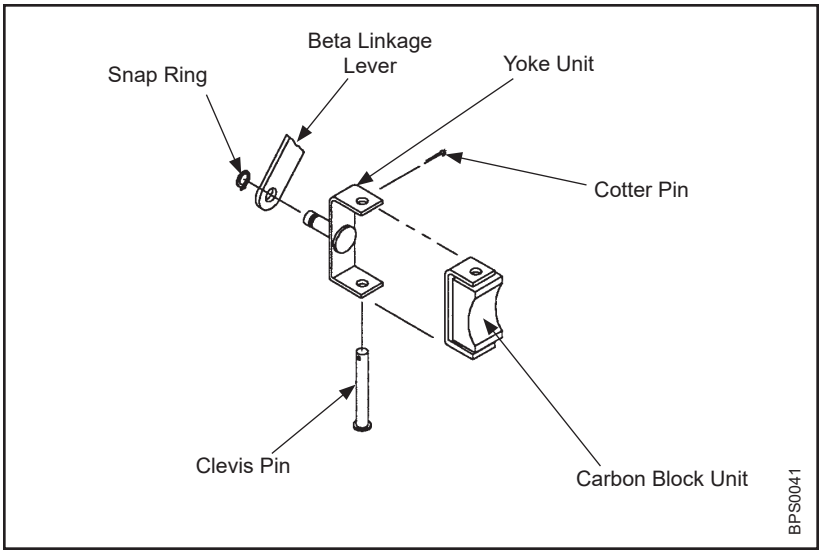

Beta Feedback Block Assembly
Figure 6-5

B. Replacement of the A-3026 Carbon Block Unit in the A-3044 Beta Feedback Block Assembly

(1) If the side clearance between the beta ring and carbon block exceeds 0.010 inch (0.25 mm) - refer to Figure 6-4, replace the A-3026 carbon block unit in accordance with Figure 6-5 and the following steps.

(a) Remove the cotter pin from the end of the clevis pin.

(b) Slide the pin from the assembly and remove and discard the carbon block unit.

(c) Inspect the yoke for wear or cracks.

1 Replace the yoke if necessary.

(d) Install a new carbon block unit and slide a new clevis pin into position.

(e) Secure the clevis pin with a T-head cotter pin.

(f) Refit the carbon block in accordance with Figure 6-4.

1 Establish the required clearance by sanding the sides of the carbon block as needed.

C. Installation of the A-3044 Beta Feedback Block Assembly

(1) Refer to Installation and Removal Chapter of this manual for installation instructions.

5. Aluminum Blades (Rev. 6)

WARNING: ALL NICKS, GOUGES, OR SCRATCHES OF ANY SIZE CAN CREATE A STRESS RISER THAT COULD POTENTIALLY LEAD TO BLADE CRACKING. ALL DAMAGE SHOULD BE VISUALLY EXAMINED CAREFULLY BEFORE FLIGHT FOR THE PRESENCE OF CRACKS OR OTHER ABNORMALITIES.

CAUTION 1: BLADES THAT HAVE BEEN PREVIOUSLY REPAIRED OR OVERHAULED MAY HAVE BEEN DIMENSIONALLY REDUCED. BEFORE REPAIRING SIGNIFICANT DAMAGE OR MAKING REPAIRS ON BLADES THAT ARE APPROACHING SERVICEABLE LIMITS, CONTACT A CERTIFIED PROPELLER REPAIR STATION WITH THE APPROPRIATE RATING OR THE HARTZELL PRODUCT SUPPORT DEPARTMENT FOR BLADE DIMENSIONAL LIMITS.

CAUTION 2: INSTRUCTIONS AND PROCEDURES IN THIS SECTION MAY INVOLVE PROPELLER CRITICAL PARTS. REFER TO THE INTRODUCTION CHAPTER OF THIS MANUAL FOR INFORMATION ABOUT PROPELLER CRITICAL PARTS. REFER TO THE ILLUSTRATED PARTS LIST CHAPTER OF THE APPLICABLE OVERHAUL MANUAL(S) FOR THE IDENTIFICATION OF SPECIFIC PROPELLER CRITICAL PARTS.

A. Important Information

(1) Nicks, gouges, and scratches on blade surfaces or on the leading or trailing edges of the blade, that are greater than 0.031 inch (0.79 mm) wide or deep, must be repaired before flight.

(2) Field repair of small nicks and scratches may be performed by qualified personnel in accordance with FAA Advisory Circular 43.13-1B, and the procedures specified in this section.

(3) Normal erosion (sand-blasted appearance) on the leading edge of the blade is acceptable and does not require removal before further flight.

B. Repair of Nicks and Gouges

(1) Local repairs may be made using files, electrical or air powered equipment. Use emery cloth, scotch brite, and crocus cloth for final finishing.

CAUTION 1: ANY REPAIR THAT INVOLVES COLD WORKING THE METAL, RESULTING IN CONCEALMENT OF A DAMAGED AREA, IS NOT PERMITTED. A STRESS CONCENTRATION MAY EXIST, THAT CAN RESULT IN A BLADE FAILURE.

CAUTION 2: SHOT PEENED BLADES ARE IDENTIFIED WITH AN "S" IMMEDIATELY FOLLOWING THE BLADE MODEL NUMBER, AS DESCRIBED IN THE DESCRIPTION AND OPERATION CHAPTER OF THIS MANUAL. BLADES THAT HAVE DAMAGE IN THE SHOT PEENED AREAS IN EXCESS OF 0.015 INCH (0.38 mm) DEEP ON THE FACE OR CAMBER OR 0.250 INCH (6.35 mm) ON THE LEADING OR TRAILING EDGES MUST BE REMOVED FROM SERVICE. THE REPAIRED AREA MUST BE SHOT PEENED BEFORE FURTHER FLIGHT. SHOT PEENING OF AN ALUMINUM BLADE MUST BE ACCOMPLISHED BY A CERTIFIED PROPELLER REPAIR STATION WITH THE APPROPRIATE RATING IN ACCORDANCE WITH HARTZELL PROPELLER ALUMINUM BLADE OVERHAUL MANUAL 133C (61-13-33).

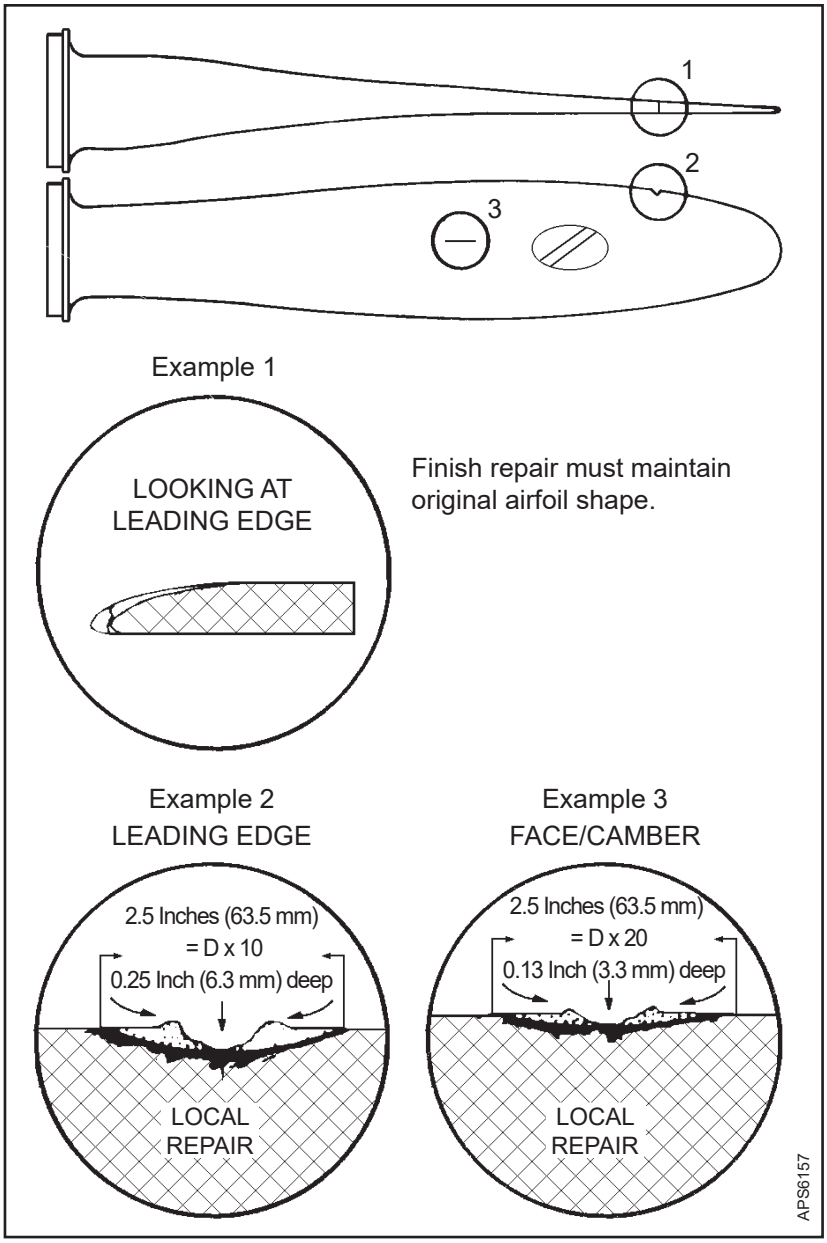

Repair Limitations
Figure 6-6

(2) Calculate the area of repair using Figure 6-6 and the following formulas:

(a) For leading and trailing edge damage:
Depth of the damage x 10. Refer to Examples 1 and 2.

NOTE: The leading edge includes the first 10% of chord from the leading edge. The trailing edge consists of the last 20% of chord adjacent to the trailing edge.

(b) For face and camber side damage:
Depth of damage x 20. Refer to Example 3.

(3) Repair damage to the leading or trailing edge of the blade by removing material from the bottom of the damaged area.

(a) Remove material from this point out to both sides of the damage to form a smooth, blended depression that maintains the original shape of the blade airfoil.

(4) Repair damage to the blade face or camber side by removing material from the bottom of the damaged area.

(a) Remove material from this point out to both sides of the damage to form a smooth, blended depression that maintains the original shape of the blade airfoil.

(b) Repairs that form a continuous line across the blade section (chordwise) are not permitted.

(5) After filing or sanding of the damaged area, use emery cloth to polish the area, then remove any file marks using crocus cloth.

(6) Inspect the repaired area with a 10X magnifying glass.

(a) Be sure that no indication of the damage, file marks, or coarse surface finish remain.

(7) If inspections show any remaining blade damage, repeat steps (5) and (6) of this procedure until no damage remains.

(8) After repair, Hartzell Propeller recommends penetrant inspection of the blade in accordance with Hartzell Propeller Standard Practices Manual 202A (61-01-02).

(9) Treat the repaired area to prevent corrosion. Properly apply chemical conversion coating and approved paint to the repaired area before returning the blade to service.

(a) Refer to the section, "Blade Paint Touch-Up" in this chapter.

C. Repair of Bent Blades

CAUTION: DO NOT ATTEMPT TO "PRE-STRAIGHTEN" BLADE BEFORE DELIVERY TO A CERTIFIED PROPELLER REPAIR STATION WITH THE APPROPRIATE RATING. THIS WILL CAUSE THE BLADE TO BE REPLACED BY THE REPAIR STATION.

(1) Repair of a bent blade or blades is considered a major repair. This type of repair must be accomplished by a certified propeller repair station with the appropriate rating, and only within approved guidelines.

Vendor	Color	Vendor P/N	Hartzell Propeller P/N
Tempo	Epoxy Black	A-150	A-6741-145-2
Tempo	Epoxy Gray	A-151	A-6741-146-2
Tempo	Epoxy White (tip stripe)	A-152	A-6741-147-2
Tempo	Epoxy Red (tip stripe)	A-153	A-6741-149-2
Tempo	Epoxy Yellow (tip stripe)	A-154	A-6741-150-2
Sherwin-Williams	Black	F75KXB9958-4311	A-6741-145-1
Sherwin-Williams	Gray	F75KXA10445-4311	A-6741-146-1
Sherwin-Williams	White (tip stripe)	F75KXW10309-4311	A-6741-147-1
Sherwin-Williams	Gray Metallic	F75KXM9754-4311	A-6741-148-1
Sherwin-Williams	Red (tip stripe)	F75KXR12320-4311	A-6741-149-1
Sherwin-Williams	Yellow (tip stripe)	F75KXY11841-4311	A-6741-150-1
Sherwin-Williams	Silver Metallic	F63TXS30880-4311	A-6741-163-1
Sherwin-Williams	Silver	F75KXS13564-4311	A-6741-190-1
Sherwin-Williams	Bright Red	1326305 or F63TXR16285-4311	A-6741-200-5
Sherwin-Williams	Bright Yellow	1326313 or F63TXY16286-4311	A-6741-201-5
Sherwin-Williams	Bright Silver	1334259	A-6741-203-5
Sherwin-Williams	Prop Gold	F63TXS17221-4311	A-6741-204-5

Touch-up Paints
Table 6-1

6. Blade Paint Touch-Up (Rev. 3)

CAUTION: INSTRUCTIONS AND PROCEDURES IN THIS SECTION MAY INVOLVE PROPELLER CRITICAL PARTS. REFER TO THE INTRODUCTION CHAPTER OF THIS MANUAL FOR INFORMATION ABOUT PROPELLER CRITICAL PARTS. REFER TO THE ILLUSTRATED PARTS LIST CHAPTER OF THE APPLICABLE OVERHAUL MANUAL(S) FOR THE IDENTIFICATION OF SPECIFIC PROPELLER CRITICAL PARTS.

A. Important Information

(1) Blade paint touch-up on Hartzell propeller blades may be permitted when performed in accordance with the instructions in this section.

(a) Aluminum Blades Only:

1 Blade paint touch-up is permitted for any size area on an aluminum blade.

B. Paint

(1) The paints listed in Table 6-1 have been tested by Hartzell Propeller and are recommended for blade touch-up.

(a) Alternate paints may be used for blade touch-up, but Hartzell Propeller accepts no responsibility for wear or adhesion-related issues.

(2) Touch-up paint manufacturer's contact information:

(a) **Tempo Products Company**
A Plasti-kote Company
1000 Lake Road
Medina, OH 44256
Tel: 800.321.6300
Fax: 216.349.4241
Cage Code: 07708

(b) **Sherwin-Williams Company**
Refer to the Sherwin-Williams
Product Finishes Global Finishes Group website at:
http://oem.sherwin-williams.com

C. Procedure

WARNING: CLEANING AGENTS (ACETONE, #700 LACQUER THINNER, AND MEK), ARE FLAMMABLE AND TOXIC TO THE SKIN, EYES, AND RESPIRATORY TRACT. SKIN AND EYE PROTECTION ARE REQUIRED. AVOID PROLONGED CONTACT. USE IN WELL VENTILATED AREA.

CAUTION: ANY REFINISHING PROCEDURE CAN ALTER PROPELLER BALANCE. PROPELLERS THAT ARE OUT OF BALANCE MAY EXPERIENCE EXCESSIVE VIBRATIONS WHILE IN OPERATION.

(1) Using a clean cloth moistened with acetone, #700 lacquer thinner, or MEK, wipe the surface of the blade to remove any contaminants.

(2) Permit the solvent to evaporate.

CAUTION 1: EXCESSIVE SANDING ON COMPOSITE BLADES WILL CAUSE "FUZZING" OF THE KEVLAR® MATERIAL. THIS CAN RESULT IN A ROUGH FINISH AND/OR DAMAGE TO THE BLADE.

CAUTION 2: BE SURE TO SAND/FEATHER THE EXISTING COATINGS TO PREVENT EXCESSIVE PAINT BUILDUP.

(3) Using 120 to 180 grit sandpaper, sand to feather the existing coatings away from the eroded or repaired area.

(a) Erosion damage is typically very similar on all blades in a propeller assembly. If one blade has more extensive damage, e.g. in the tip area, sand all the blades in the tip area to replicate the repair of the most severely damaged blade tip. This practice is essential in maintaining balance after refinishing.

(4) Using acetone, #700 lacquer thinner, or MEK, wipe the surface of the blade.

(5) Permit the solvent to evaporate.

(6) Aluminum Blades Only:

(a) Apply an approved corrosion preventative coating to the bare aluminum surface of the blade in accordance with the manufacturer's instructions.

1 Oakite 31, Chromicote L-25, or Alodine 1201 are approved chemical conversion coatings.

(7) Apply masking material for the erosion shield, anti-icing or de-ice boot, and tip stripes, as needed.

WARNING: FINISH COATINGS ARE FLAMMABLE AND TOXIC TO THE SKIN, EYES AND RESPIRATORY TRACT. SKIN AND EYE PROTECTION ARE REQUIRED. AVOID PROLONGED CONTACT. USE IN A WELL VENTILATED AREA.

CAUTION: APPLY FINISH COATING TO UNIFORMLY COVER THE REPAIR/EROSION. AVOID EXCESSIVE PAINT BUILDUP ALONG THE TRAILING EDGE TO AVOID CHANGING THE BLADE PROFILE AND/OR P-STATIC CHARACTERISTICS.

(8) Apply a sufficient amount of finish coating to achieve 2 to 4 mils thickness when dry.

(a) Re-coat before 30 minutes, or after 48 hours.

(b) If the paint is permitted to dry longer than 4 hours, it must be lightly sanded before another coat is applied.

(9) Remove the masking material from the tip stripes and re-apply masking material for the tip stripe refinishing if required.

(10) Apply sufficient tip stripe coating to achieve 2 to 4 mils thickness when dry.

(a) Re-coat before 30 minutes, or after 48 hours.

(b) If the paint is permitted to dry longer than 4 hours, it must be lightly sanded before another coat is applied.

(11) Remove the masking material immediately from the anti-icing or de-ice boot and tip stripes, if applicable.

(12) Optionally, perform dynamic balancing in accordance with the procedures and limitations specified in the Dynamic Balance section of this chapter.

7. Dynamic Balance

CAUTION: INSTRUCTIONS AND PROCEDURES IN THIS SECTION MAY INVOLVE CRITICAL PARTS. REFER TO THE INTRODUCTION CHAPTER OF THIS MANUAL FOR INFORMATION ABOUT PROPELLER CRITICAL PARTS. REFER TO THE ILLUSTRATED PARTS LIST CHAPTER OF THE APPLICABLE OVERHAUL MANUAL(S) FOR THE IDENTIFICATION OF SPECIFIC PROPELLER CRITICAL PARTS.

A. Overview

WARNING: WHEN USING REFLECTIVE TAPE FOR DYNAMIC BALANCING, DO NOT APPLY THE TAPE ON EXPOSED BARE METAL OF A BLADE. THIS WILL ALLOW MOISTURE TO COLLECT UNDER THE TAPE AND CAUSE CORROSION THAT CAN PERMANENTLY DAMAGE THE BLADE. REFLECTIVE TAPE MUST BE REMOVED AFTER DYNAMIC BALANCING IS COMPLETED.

NOTE: Dynamic balance is recommended to reduce vibrations that may be caused by a rotating system (propeller and engine) imbalance. Dynamic balancing can help prolong the life of the propeller, engine, airframe, and avionics.

(1) Dynamic balance is accomplished by using an accurate means of measuring the amount and location of the dynamic imbalance.

(2) The maximum permitted imbalance reading is 0.2 IPS.

(3) The number of balance weights installed must not exceed the limits specified in this chapter.

(4) Follow the dynamic balance equipment manufacturer's instructions for dynamic balance in addition to the specifications of this section.

NOTE: Some engine manufacturer's instructions also contain information on dynamic balance limits.

B. Inspection Procedures Before Balancing

(1) Visually inspect the propeller assembly before dynamic balancing.

NOTE: The first run-up of a new or overhauled propeller assembly may leave a small amount of grease on the blades and inner surface of the spinner dome.

(a) Use a Stoddard solvent (or equivalent) to completely remove any grease on the blades or inner surface of the spinner dome.

(b) Visually check each propeller blade assembly for evidence of grease leakage.

(c) Visually inspect the inner surface of the spinner dome for evidence of grease leakage.

(2) If there is no evidence of grease leakage, lubricate the propeller in accordance with the Maintenance Practices chapter in this manual. If grease leakage is evident, determine the location of the leak and correct before re-lubricating the propeller and dynamic balancing.

(3) Before dynamic balancing, record the number and location of all balance weights.

C. Modifying Spinner Bulkhead to Accommodate Dynamic Balance Weights

CAUTION: ALL HOLE/BALANCE WEIGHT LOCATIONS MUST TAKE INTO CONSIDERATION, AND MUST AVOID, ANY POSSIBILITY OF INTERFERING WITH THE ADJACENT AIRFRAME, DE-ICE AND ENGINE COMPONENTS.

(1) It is recommended that the placement of balance weights be in a radial location on aluminum spinner bulkheads that have not been previously drilled.

(2) The radial location should be outboard of the de-ice slip ring or bulkhead doubler and inboard of the bend where the bulkhead creates the flange to attach the spinner dome.

(3) Twelve equally spaced locations are recommended for weight attachment.

(4) Installing nut plates (10-32 thread) of the type used to attach the spinner dome will permit convenient balance weight attachment on the engine side of the bulkhead.

(5) Alternatively, drilling holes for use with the AN3-( ) type bolts with self-locking nuts is permitted.

(6) Chadwick-Helmuth Manual AW-9511-2, "The Smooth Propeller", specifies several generic bulkhead rework procedures. These are permitted if they comply with the conditions specified herein.

D. Placement of Balance Weights for Dynamic Balance

(1) The preferred method of attachment of dynamic balance weights is to add the weights to the spinner bulkhead.

NOTE: Many spinner bulkheads have factory installed self-locking nut plates provided for this purpose.

(2) If the location of static balance weights has not been altered, subsequent removal of the dynamic balance weights will return the propeller to its original static balance condition.

(3) Use only stainless or plated steel washers as dynamic balance weights on the spinner bulkhead.

(4) A maximum of six AN970 style washers weighing up to approximately 1.0 oz (28.0 g) may be installed at any one location.

NOTE: The dimensions of an AN970 washer are: ID 0.203 inch (5.16 mm), OD 0.875 inch (22.23 mm), and thickness 0.063 inch (1.59 mm).

(5) Install weights using aircraft quality #10-32 or AN-3( ) type screws or bolts.

(6) Balance weight screws attached to the spinner bulkhead must protrude through the self-locking nuts or nut plates a minimum of one thread and a maximum of four threads.

NOTE: It may be necessary to alter the number and/or location of static balance weights in order to achieve dynamic balance.

(7) If reflective tape is used for dynamic balancing, remove the tape immediately upon completion. Tape that remains on the blade will permit moisture to collect under the tape and cause corrosion that can permanently damage the blade.

(8) Record the number and location of dynamic balance weights and static balance weights, if they have been reconfigured, in the logbook.

8. Hydraulic Low Pitch Stop Setting (Rev. 2)

A. Hydraulic Low Pitch Stop Adjustment

(1) The hydraulic low pitch stop is normally set by Hartzell Propeller in accordance with the aircraft manufacturer's requirements, and should not require any additional adjustment.

(a) Adjustments may be required after maintenance or because of aircraft variances.

1 Adjustments must be done in accordance with the specifications found in the airframe manufacturer's manual.

9. Feathering Pitch Stop Settings (Rev. 2)

A. Feathering Pitch Stop Adjustment

(1) The feathering pitch stop is set by Hartzell Propeller in accordance with the aircraft manufacturer's recommendations.

(2) The feathering pitch stop can only be adjusted by Hartzell or by a certified propeller repair station with the appropriate rating.

10. Reverse Pitch Stop Settings (Rev. 2)

A. Reverse Pitch Stop Adjustment

(1) The reverse pitch stop is set by Hartzell Propeller in accordance with the aircraft manufacturer's recommendations.

(2) The reverse pitch stop can only be adjusted by Hartzell or by a certified propeller repair station with the appropriate rating.

11. Propeller Ice Protection Systems (Rev. 1)
    A. Maintenance Information
        (1) Refer to the Anti-ice and De-ice Systems chapter of this manual for ice protection system maintenance information.

12. Tachometer Calibration (Rev. 2)

    WARNING: OPERATION WITH AN INACCURATE TACHOMETER CAN CAUSE RESTRICTED RPM OPERATION AND DAMAGING HIGH STRESSES. PROPELLER LIFE WILL BE SHORTENED AND COULD CAUSE CATASTROPHIC FAILURE.

    A. Important Information
        (1) All engine/propeller combinations have operating conditions at which the propeller blade stresses begin to reach design limits.
            (a) In most cases, these conditions occur above the maximum rated RPM of the engine.
            (b) Some engine/propeller combinations have certain ranges of RPM that are less than maximum engine speed, where stresses are at a level considered too high for continuous operation. This results in a restricted operating range where continuous operation is not permitted. A placard on the instrument panel or yellow arc on the tachometer will inform the pilot to avoid operation in this range.
            (c) In other cases, the limiting condition occurs at an RPM only slightly above the maximum engine RPM.
            (d) For these reasons, it is very important to accurately monitor engine speed.

(2) The accuracy of the tachometer is critical to the safe operation of the aircraft.

(a) Some tachometers have been found to be in error by as much as 200 RPM.

(b) Operating the aircraft with an inaccurate tachometer could cause continued operation at unacceptably high stresses, including repeatedly exceeding the maximum engine RPM.

(c) Continuous operation in a restricted RPM range subjects the propeller to stresses that are higher than the design limits.

(d) Stresses that are higher than the design limits will shorten the life of the propeller and could cause a catastrophic failure.

B. Tachometer Calibration

(1) Hartzell Propeller recommends that propeller owners/operators calibrate the engine tachometer in accordance with the National Institute of Standards and Technology (NIST) or similar national standard (traceable).

(2) Contact the Hartzell Propeller Product Support Department if the propeller was operated in a restricted RPM range because of a tachometer error.

ANTI-ICE AND DE-ICE SYSTEMS - CONTENTS

(Blank Page)

1. Anti-ice System Description (Rev. 1)

WARNING: CONSULT THE PILOT OPERATING HANDBOOK (INCLUDING ALL SUPPLEMENTS) REGARDING FLIGHT INTO CONDITIONS OF KNOWN ICING. THE AIRCRAFT MAY NOT BE CERTIFICATED FOR FLIGHT INTO KNOWN ICING CONDITIONS, EVEN THOUGH AN ICE PROTECTION SYSTEM IS INSTALLED.

NOTE: There are many configurations of anti-ice systems. This section provides a general overview of system operation. Consult the airframe manufacturer's manual for a description of your specific anti-ice system and controls.

A. Overview of an Anti-ice System

(1) A propeller anti-ice system prevents formation of ice on the propeller blades. The system dispenses a liquid (usually isopropyl alcohol) onto the propeller blades. This liquid mixes with moisture on the blades and lowers the freezing point of the water, allowing the water/alcohol mixture to flow off of the blades before ice forms.

(a) Anti-ice systems must be in use before ice forms. This system is not effective for removing ice after it has formed.

B. Components of an Anti-ice System

(1) A typical anti-ice system includes the following components:

(a) Fluid tank, pump, slinger ring, blade mounted anti-icing boots, and fluid dispensing tubes located at each blade mounted anti-icing boot

C. Anti-ice System Operation

(1) The anti-ice system is typically controlled by the pilot using a cockpit mounted rheostat. The rheostat controls the pump and the flow of anti-ice fluid from the fluid tank.

(2) The anti-ice fluid is pumped through airframe mounted distribution tubing and into a rotating slinger ring that is mounted on the rear of the propeller hub.

(3) From the slinger ring, centrifugal force pushes the anti-icing fluid through the fluid dispensing tubes onto the blade mounted anti-icing boots.

(4) The anti-icing boots evenly distribute the fluid along the leading edge of the propeller blade to prevent ice from forming.

2. De-ice System Description (Rev. 1)

WARNING: CONSULT THE PILOT OPERATING HANDBOOK (INCLUDING ALL SUPPLEMENTS) REGARDING FLIGHT INTO CONDITIONS OF KNOWN ICING. THE AIRCRAFT MAY NOT BE CERTIFICATED FOR FLIGHT INTO KNOWN ICING CONDITIONS, EVEN THOUGH AN ICE PROTECTION SYSTEM IS INSTALLED.

NOTE: There are many configurations of de-ice systems. This section provides a general overview of system operation. Consult the airframe manufacturer's manual for a description of your specific de-ice system and controls.

A. Overview of a De-ice System

(1) A propeller de-ice system removes ice after it forms on the propeller blades. The system uses electrical heating elements to melt the ice layer next to the blade permitting the ice to be thrown from the blade by centrifugal force.

B. Components of a De-ice System

(1) A typical de-ice system includes the following components:

(a) ON/OFF switch(es), ammeter, timer or cycling unit, slip ring, brush blocks, and blade mounted de-ice boots.

C. De-ice System Operation

(1) The de-ice system is controlled by the pilot using a cockpit control switch. When this switch is ON, electrical power is supplied to the de-ice system.

(a) Some systems may have additional controls to adjust for different icing conditions.

1 A mode selector switch lets the pilot set the cycling speed for heavy or light icing conditions.

2 For twin engine aircraft, a full de-ice mode switch lets the pilot de-ice both propellers simultaneously. This switch is used when ice builds up on the propeller before the system is turned on and may only be used for short periods.

(2) The ammeter indicates current draw by the system. It is typically located near the de-ice system switches. The ammeter may indicate total system load, or in twin engine aircraft, a separate ammeter may be supplied for each propeller.

(3) The timer or cycling unit is controlled by the pilot using a cockpit control switch. When the timer/cycling unit is ON, power is applied to each de-ice boot (or boot segment) in a sequential order for a preset amount of time. This heating interval evenly de-ices the propeller.

(4) The brush block supplies electrical current to the de-ice boot on each propeller blade via a slip ring. The brush block is typically mounted on the engine just aft of the propeller. The slip ring rotates with the propeller and is typically mounted on the spinner bulkhead.

(5) The de-ice boots contain internal heating elements that melt the ice layer from the blades when electrical current is applied. De-ice boots are attached to the leading edge of each blade using adhesive.

3. Operational Checks (Rev. 2)
   A. De-ice and Anti-ice Systems
      (1) Perform the applicable Operational Check procedure(s) in accordance with the Check chapter in Hartzell Propeller Ice Protection System Manual 180 (30-61-80) and/or the Aircraft Maintenance Manual.

4. Troubleshooting (Rev. 2)
   A. De-ice and Anti-ice Systems
      (1) Refer to the applicable chapter(s) in Hartzell Propeller Ice Protection System Manual 180 (30-61-80) to troubleshoot malfunctions in Hartzell de-ice and anti-ice systems.
         (a) Part numbers for components used in Hartzell de-ice and anti-ice systems are found in Hartzell Propeller Ice Protection System Manual 180 (30-61-80).

5. Periodic Inspections (Rev. 2)
   A. De-ice and Anti-ice Systems
      (1) Refer to the Check chapter in Hartzell Propeller Ice Protection System Manual 180 (30-61-80) for detailed information about inspection intervals and procedures.

RECORDS - CONTENTS

(Blank Page)

1. Record Keeping
   A. General
      (1) Federal Aviation Regulations require that a record be kept of any repairs, adjustments, maintenance, or required inspections performed on a propeller or propeller system.
   B. Information to be Recorded
      (1) Refer to Part 43 of the U.S. Federal Aviation Regulations for a list of information that must be recorded.
      (2) The logbook may also be used to record:
         (a) Propeller position (on aircraft)
         (b) Propeller model
         (c) Propeller serial number
         (d) Blade design number
         (e) Blade serial numbers
         (f) Spinner assembly part number
         (g) Propeller pitch range
         (h) Aircraft information (aircraft type, model, serial number and registration number).

(Blank Page)